ECP5 and ECP5-5G SerDes/PCS User Guide

Technical Note

FPGA-TN-02206-1.7

August 2023

Disclaimers

Lattice makes no warranty, representation, or guarantee regarding the accuracy of information contained in this document or the suitability of its products for any particular purpose. All information herein is provided AS IS, with all faults and associated risk the responsibility entirely of the Buyer. Buyer shall not rely on any data and performance specifications or parameters provided herein. Products sold by Lattice have been subject to limited testing and it is the Buyer's responsibility to independently determine the suitability of any products and to test and verify the same. No Lattice products should be used in conjunction with mission- or safety-critical or any other application in which the failure of Lattice's product could create a situation where personal injury, death, severe property or environmental damage may occur. The information provided in this document is proprietary to Lattice Semiconductor, and Lattice reserves the right to make any changes to the information in this document or to any products at any time without notice.

©2014-2023 Lattice Semiconductor Corp. All Lattice trademarks, registered trademarks, patents, and disclaimers are as listed at www.latticesemi.com/legal.
All other brand or product names are trademarks or registered trademarks of their respective holders. The specifications and information herein are subject to change without notice.

Contents

Acronyms in This Document 9
1. Introduction 10
2. Features 11
3. New Features over LatticeECP3 SerDes/PCS 12
4. Difference between ECP5 and ECP5-5G SerDes/PCS 12
5. Using This Technical Note 12
6. Standards Supported 13
7. Architecture Overview 14
7.1. Multi-Protocol Design Consideration 16
7.2. Detailed Channel Block Diagram 16
7.3. Clocks and Resets 17
7.4. Transmit Data Bus 17
7.5. Receive Data Bus 18
7.6. Control and Status Signals 19
7.6.1. Control Signals 20
7.6.2. Status Signals 20
7.7. SerDes/PCS 20
7.8. I/O Descriptions 21
8. SerDes/PCS Functional Description 24
8.1. SerDes Buffers 24
8.1.1. Tx Differential Output Driver 24
8.2. SerDes 25
8.2.1. Linear Equalizer 25
8.2.2. De-emphasis 25
8.2.3. Reference Clocks 25
8.2.4. SerDes Clock Architecture 26
8.2.5. Rate Modes 26
8.3. Reference Clock from FPGA Core 27
8.3.1. Full Data, Div 2 and Div 11 Data Rates 27
8.4. Reference Clock Sources 28
8.4.1. refclkp, refclkn 28
8.4.2. FPGA txrefclk, rxrefclk 28
8.5. Clock Distribution in Complementary DCUs 28
8.6. Spread Spectrum Clocking (SSC) Support 29
8.7. Loss of Signal 29
8.8. Loss of Lock 30
8.9. Tx Lane-to-Lane Skew 30
8.10. Transmit Data 30
8.11. 8b10b Encoder 30
8.12. Serializer 30
8.13. Receive Data 30
8.14. Deserializer 30
8.15. Word Alignment (Byte Boundary Detect) 31
8.16. 8b10b Decoder 31
8.17. External Link State Machine Option 31
8.18. Idle Insert for Gigabit Ethernet Mode 32
8.19. Clock Tolerance Compensation 32
8.20. Calculating Minimum Interpacket Gap 34
8.21. Protocol Modes 35
8.21.1. Generic 8b10b Mode 35
8.21.2. Gigabit Ethernet and SGMII Modes 36
8.21.3. Gigabit Ethernet Idle Insert and correct_disp_ch[1:0] Signals 37

©2014-2023 Lattice Semiconductor Corp. All Lattice trademarks, registered trademarks, patents, and disclaimers are as listed at www.latticesemi.com/legal.
All other brand or product names are trademarks or registered trademarks of their respective holders. The specifications and information herein are subject to change without notice.

8.22. XAUI Mode 37
8.23. PCI Express Revision 1.1 and 2.0 38
8.24. PCI Express Termination 39
8.25. PCI Express Electrical Idle Transmission 40
8.26. PCI Express Electrical Idle Detection 40
8.27. PCI Express Receiver Detection 41
8.28. PCI Express Power Down Mode 42
8.29. PCI Express Beacon Support 42
8.30. Serial Digital Video and Out-Of-Band Low-Speed SerDes Operation 43
8.31. Common Public Radio Interface (CPRI) 44
8.32. SDI (SMPTE) Mode 46
8.33. Embedded Display Port (eDP) 47
9. Example of Dual-based Channel Arrangements 48
9.1. Tx Case 1 48
9.2. Tx Case 2 48
9.3. Tx Case 3 49
9.4. Rx Case1 50
9.5. Rx Case 2 50
10. FPGA Interface Clocks 51
10.1. 2:1 Gearing 52
10.2. Case I_a: 8/10-bit, CTC FIFO NOT Bypassed 53
10.3. Case I_b: 8/10-bit, CTC FIFO Bypassed 54
10.4. Case I_c: 8/10-bit, FPGA Bridge FIFOs Bypassed 55
10.5. Case I_d: 8/10-bit, CTC FIFO and FPGA Bridge FIFOs Bypassed 56
10.6. Case II_a: 16/20-bit, CTC FIFO NOT Bypassed 57
10.7. Case II_b: 16/20-bit, CTC FIFO Bypassed 58
11. SerDes/PCS Block Latency 59
12. SerDes Client Interface 61
12.1. Introduction 61
12.2. Interrupts and Status 63
12.3. Dynamic Configuration of the SerDes/PCS Dual 63
13. SerDes Debug Capabilities 64
13.1. PCS Loopback Modes 64
13.2. ECO Editor 64
14. Other Design Considerations 65
14.1. Simulation of the SerDes/PCS 65
14.2. 16/20-Bit Word Alignment 65
14.2.1. Unused Dual/Channel and Power Supply 66
15. SerDes/PCS Reset 67
15.1. Reset and Power-Down Control 67
15.2. Reset Generation 67
15.3. Reset Sequence 69
16. Clarity Designer (System Builder/Planner) Overview 75
16.1. Top Level Block Diagram 75
17. SerDes/PCS Generation in Clarity Designer (System Builder/Planner) 76
17.1. EXTREF Block 85
17.2. EXTREF I/O Port Description 85
Appendix A. Configuration Registers 87
Dual Registers Overview 87
Per Dual PCS Control Register Details 88
Per Dual SerDes Control Register Details 90
Per Dual Reset and Clock Control Register Details 91
Per Dual PCS Status Register Details 92
Per Dual SerDes Status Register Details 93

©2014-2023 Lattice Semiconductor Corp. All Lattice trademarks, registered trademarks, patents, and disclaimers are as listed at www.latticesemi.com/legal.
All other brand or product names are trademarks or registered trademarks of their respective holders. The specifications and information herein are subject to change without notice.

Per Channel Register Overview 94
Per Channel PCS Register Details 95
Per Channel SerDes Control Register Details 99
Per Channel Reset and Clock Control Register Details 106
Per Channel PCS Status Register Details 106
Per Channel SerDes Status Register Details 107
Appendix B. Register Settings for Various Standards 109
References 110
Technical Support Assistance 111
Revision History 112

©2014-2023 Lattice Semiconductor Corp. All Lattice trademarks, registered trademarks, patents, and disclaimers are as listed at www.latticesemi.com/legal.
All other brand or product names are trademarks or registered trademarks of their respective holders. The specifications and information herein are subject to change without notice.

Figures

Figure 7.1. LFE5UM-85/LFE5UM5G-85 Block Diagram 14
Figure 7.2. Simplified Block Diagram of Two DCUs in LFE5UM-45/LFE5UM5G-45 and LFE5UM-85/LFE5UM5G-85 15
Figure 7.3. Two DCUs Pair with Clock Sharing 15
Figure 7.4. LFE5UM/LFE5UM5G SerDes/PCS Detailed Channel Block Diagram 17
Figure 7.5. SerDes/PCS Block Signal Interface 20
Figure 8.1. Transmitter H-Bridge Driver with Termination and De-emphasis 25
Figure 8.2. SerDes Clock Architecture 26
Figure 8.3. Reference Clock Block Diagram 27
Figure 8.4. Clock Distribution Diagram for a Two Complementary DCU Pair 28
Figure 8.5. Loss of Signal Detector connection to Receiver Inputs 29
Figure 8.6. Clock Tolerance Compensation 2-Byte Deletion Example 32
Figure 8.7. Clock Tolerance Compensation 2-Byte Insertion Example 33
Figure 8.8. Clock Tolerance Compensation 4-Byte Deletion Example 33
Figure 8.9. Clock Tolerance Compensation 4-Byte Insertion Example 33
Figure 8.10. PCI Express Interface Diagram 39
Figure 8.11. Transmit Electrical Idle 40
Figure 8.12. PCI Express Mode Receiver Detection Sequence 41
Figure 8.13. Example: 3G/HD/SD RX/TX At Different Rate 43
Figure 8.14. Conceptual Low Date Rate Path for Rx and Tx; Example for Out-of-Band Application 44
Figure 8.15. Link Between REC Master Port and RE Slave Port (Single Hop Scenario) 45
Figure 9.1. Tx Case 1 48
Figure 9.2. Tx Case 2 49
Figure 9.3. Tx Case 3 49
Figure 9.4. Rx Case 1 50
Figure 9.5. Rx Case 2 50
Figure 10.1. Conceptual PCS/FPGA Clock Interface Diagram 51
Figure 10.2. 8/10-Bit, CTC FIFO, and Rx/Tx FIFOs NOT Bypassed 53
Figure 10.3. 8/10-Bit, CTC FIFO Bypassed 54
Figure 10.4. 8/10-Bit, Rx/Tx FIFO Bypassed 55
Figure 10.5. 8/10-Bit, CTC FIFO, and Rx/Tx FIFOs Bypassed 56
Figure 10.6. 16/20-Bit, CTC FIFO, and Rx/Tx FIFOs NOT Bypassed 57
Figure 10.7. 16/20-Bit, CTC FIFO Bypassed 58
Figure 11.1. Transmitter and Receiver Latency Block Diagram 60
Figure 12.1. LFE5UM/LFE5UM5G SCI (SerDes Client Interface) Block Diagram 61
Figure 12.2. SCI WRITE Cycle, Critical Timing 62
Figure 12.3. SCI READ Cycle, Critical Timing 62
Figure 13.1. LFE5UM/LFE5UM5G SerDes Three Loopback Modes 64
Figure 15.1. Reset and Power-Down Control 67
Figure 15.2. Global Reset Diagram 68
Figure 15.3. Reset Sequence in Clarity Design, PCS Module 70
Figure 15.4. Reset Sequence Logic (RSL) Block Diagram 71
Figure 15.5. RSL Connectivity to Single-Channel in One DCU 72
Figure 15.6. Connectivity of 2-Channel RSL in 2-Channel DCU 73
Figure 15.7. Merging Two Single-Channel PCS Modules with RSL Included 73
Figure 16.1. Three Components Connectivity (for 1-Lane Link) 75
Figure 17.1. Clarity Designer Tool 76
Figure 17.2. Clarity Designer Catalog 77
Figure 17.3. PCS Module in Clarity Designer 77
Figure 17.4. Instance Setup Tab 78
Figure 17.5. SerDes Setup Tab 80
Figure 17.6. PCS Setup Tab 81
Figure 17.7. Control Setup Tab 83

©2014-2023 Lattice Semiconductor Corp. All Lattice trademarks, registered trademarks, patents, and disclaimers are as listed at www.latticesemi.com/legal.
All other brand or product names are trademarks or registered trademarks of their respective holders. The specifications and information herein are subject to change without notice.

Figure 17.8. Advanced Setup Tab 84
Figure 17.9. EXTREF Block Diagram 85
Figure 17.10. EXTREF Module In Clarity Designer 85
Figure 17.11. EXTREF Tab 86

©2014-2023 Lattice Semiconductor Corp. All Lattice trademarks, registered trademarks, patents, and disclaimers are as listed at www.latticesemi.com/legal.
All other brand or product names are trademarks or registered trademarks of their respective holders. The specifications and information herein are subject to change without notice.

Tables

Table 6.1. Standards Supported by the SerDes/PCS 13
Table 7.1. Number of SerDes/PCS Channels Per LFE5UM/LFE5UM5G Device 14
Table 7.2. LFE5UM/LFE5UM5G Mixed Protocol Pair 16
Table 7.3. Data Bus Usage by Mode 18
Table 7.4. Control and Status Signals and their Functions 19
Table 7.5. SerDes/PCS I/O Descriptions 21
Table 8.1. TXPLL and RX CDRPLL Supported Modes 27
Table 8.2. Response Time for Loss of Signal Detector 29
Table 8.3. Response Time for Loss-of-Lock Detector 30
Table 8.4. Minimum Interpacket Gap Multiplier 34
Table 8.5. GbE IDLE State Machine Control and Status Signals 36
Table 8.6. PCI Express Mode Specific Ports 38
Table 8.7. Differential PCI Express Specifications 39
Table 10.1. Seven User Interface Cases between SerDes/PCS Dual and FPGA Core 52
Table 10.2. Decision Matrix for Six Interface Cases 52
Table 11.1. Transmit/Receive SerDes/PCS Latency 59
Table 11.2. Word Aligner Latency versus Offset 59
Table 12.1. Timing Parameter 62
Table 12.2. Dual Interrupt Sources 63
Table 12.3. Channel Interrupt Sources 63
Table 15.1. Reset Table 68
Table 15.2. Power-Down Control Description 69
Table 15.3. Power-Down/Power-Up Timing Specification 69
Table 17.1. Instance Setup Tab Description 78
Table 17.2. SerDes Setup Tab Description 81
Table 17.3. PCS Setup Tab Description 82
Table 17.4. Control Setup Tab Description 83
Table 17.5. Advanced Setup Tab Description 84
Table 17.6. EXTREF Tab Description 86

©2014-2023 Lattice Semiconductor Corp. All Lattice trademarks, registered trademarks, patents, and disclaimers are as listed at www.latticesemi.com/legal.
All other brand or product names are trademarks or registered trademarks of their respective holders. The specifications and information herein are subject to change without notice.

Acronyms in This Document

A list of acronyms used in this document.

Acronym	Definition
ADC	Analog-to-Digital Converter
CDR	Clock Data Recovery
CML	Current Mode Logic
CPRI	Common Public Radio Interface
CTC	Clock Tolerance Compensation
DAC	Digital-to-Analog Converter
DCU	Dual Channel Unit
DRU	Data Recovery Unit
EBR	Embedded Block RAM
EOS	Electrical Idle Ordered Set
FIFO	First In First Out
FPGA	Field-Programmable Gate Array
HBR	High Bit Rate
LSB	Least Significant Bit
LSM	Link State Machine
LVDS	Low-Voltage Differential Signaling
LVPECL	Low-Voltage Positive Emitter-Coupled Logic
MSB	Most Significant Bit
PCB	Printed Circuit Board
PCIe	Peripheral Component Interconnect Express
PCS	Physical Coding Sublayer
PLL	Phase Locked Loop
RBR	Reduced Bit Rate
REC	Radio Equipment Control
RSL	Reset Sequence Logic
SCI	SerDes Client Interface
SerDes	Serializer/Deserializer

©2014-2023 Lattice Semiconductor Corp. All Lattice trademarks, registered trademarks, patents, and disclaimers are as listed at www.latticesemi.com/legal.
All other brand or product names are trademarks or registered trademarks of their respective holders. The specifications and information herein are subject to change without notice.

1. Introduction

The Lattice Semiconductor ECP5™ and ECP5-5G™ family architecture is similar to LatticeECP3™ SerDes, with enhanced granularity, low power, and low cost. Up to four channels of embedded SerDes with associated Physical Coding Sublayer (PCS) logic are arranged in dual channel blocks.

Two channels of the LFE5UM/LFE5UM5G are built into one unit called the Dual Channel Unit (DCU). Each DCU contains one reference clock input and one TxPLL. This dual-channel-based architecture provides a higher clock-to-SerDes channel ratio than its predecessor FPGAs (ECP2M and ECP3).

Each channel of PCS contains dedicated transmit and receive logic for high-speed, full-duplex serial data transfer at data rates up to 3.2 Gb/s. The PCS logic in each channel can be configured to support an array of popular data protocols including GbE, XAUI, PCI Express, CPRI, JESD2048, SD-SDI, HD-SDI, and 3G-SDI. In addition, the protocol-based logic can be fully or partially bypassed in many configurations to give you the flexibility in designing your high-speed data interface.

The PCS also provides bypass modes that allow a direct 8-bit or 10-bit interface from the SerDes to the FPGA logic. Each SerDes channel input can be independently AC-coupled or DC-coupled and can allow for both high-speed and low-speed operation on the same SerDes pin for applications such as Serial Digital Video.

©2014-2023 Lattice Semiconductor Corp. All Lattice trademarks, registered trademarks, patents, and disclaimers are as listed at www.latticesemi.com/legal.
All other brand or product names are trademarks or registered trademarks of their respective holders. The specifications and information herein are subject to change without notice.

2. Features

- Up to Four Channels of High-Speed SerDes with Increased Granularity
  - From 270 Mb/s up to 3.2 Gb/s for ECP5 device family
  - Up to 5 Gb/s for ECP5-5G device family on most protocol standards. Refer to Table 6.1.
  - 3.2 Gb/s operation with low 85 mW power per channel
  - Receive equalization and transmit de-emphasis with both pre-cursor and post-cursor, for small form factor backplane operation
  - Supports PCI Express, Gigabit Ethernet (1GbE and SGMII), and XAUI, plus multiple other standards.
  - Supports user-specified generic 8b10b mode.
- Multiple Clock Rate Support
  - Separate reference clocks for each DCU allow easy handling of multiple protocol rates on a single device
- Full-Function Embedded Physical Coding Sublayer (PCS) Logic Supporting Industry Standard Protocols
  - Up to four channels of full-duplex data are supported per device
  - Multiple protocol support on one chip
  - Supports popular 8b10b-based packet protocols.
  - SerDes Only mode allows direct 8-bit or 10-bit interface to FPGA logic.
- Multiple Protocol Compliant Clock Tolerance Compensation (CTC) Logic
  - Compensates for frequency differential between the reference clock and received data rate.
  - Allows user-defined skip pattern of two or four bytes in length.
- Integrated Loopback Modes for System Debugging
  - Three loopback modes are provided for system debugging
- Easy to Use Design Interface in Lattice Diamond® Design Tool
  - System Planner/Builder provides an easy-to-use user interface to assist you to instantiate the SerDes as a link, instead of individual SerDes channels.
  - The tools allow you to plan all resources to complete the design of a functional link, including SerDes/PCS, Lattice IPs or user design IPs, and all interface logic.

©2014-2023 Lattice Semiconductor Corp. All Lattice trademarks, registered trademarks, patents, and disclaimers are as listed at www.latticesemi.com/legal.
All other brand or product names are trademarks or registered trademarks of their respective holders. The specifications and information herein are subject to change without notice.

3. New Features over LatticeECP3 SerDes/PCS

- LFE5UM/LFE5UM5G implements the SerDes block in Dual-Channel architecture. This architecture provides more clock resources per channel block, which allows you to have more flexibility in utilizing the channels.
- Bit-slip feature simplifies user logic on Word Alignment. This function is important for CPRI and JESD204A/B applications.
- Supports Transmit/Receive to eDP SerDes interface, up to 2.7 Gb/s.
- Supports JESD204A/B – ADC and DAC converter I/F: 312.5 Mb/s to 3.125 Gb/s for ECP5, to 5 Gb/s for ECP5-5G.
- H-Bridge output driver reduces power consumption.

4. Difference between ECP5 and ECP5-5G SerDes/PCS

ECP5-5G makes some enhancements in the SerDes to the ECP5 family. These enhancements increase the performance of the SerDes to up to 5 Gb/s data rate.

To take full advantage of the designs that have been done with ECP5, the ECP5-5G family devices are pinned compatible with devices in the ECP-5 family.

One difference that needs to be noted is the ECP5-5G devices need 1.2 V nominal on SerDes VCCA, VCCHRX, and VCCHTX power supplies, compared to the 1.1 V needed for the ECP-5 family. Refer to ECP5 and ECP5-5G Family Data Sheet (FPGA-DS-02012).

5. Using This Technical Note

The Lattice Diamond design tools support all modes of the PCS. Most modes are dedicated to applications for a specific industry standard data protocol. Other modes are more general-purpose in nature and allow designers to define their custom application settings. Diamond design tools allow you to define the mode for each dual in their design. This technical note describes the operation of the SerDes and PCS for all modes supported by Diamond.

This document provides a thorough description of the complete functionality of the embedded SerDes and associated PCS logic. Electrical and timing characteristics of the embedded SerDes are provided in the ECP5 and ECP5-5G Family Data Sheet (FPGA-DS-02012). Operation of the PCS logic is provided in the SerDes/PCS Functional Description section. A table of all status and control registers associated with the SerDes and PCS logic which can be accessed through the SerDes Client Interface (SCI) Bus is provided in the appendices. Package pinout information is provided in the Pinout Information section of ECP5 and ECP5-5G Family Data Sheet (FPGA-DS-02012).

Additional information regarding the off-chip signal interface design and characteristics can be found in the Electrical Recommendations for Lattice SerDes Technical Note (FPGA-TN-02077). The Electrical Recommendations for Lattice SerDes Technical Note (FPGA-TN-02077) also contains information on the detailed interfacing requirements to external high-speed devices and the transmission line interconnections between devices.

The ECP5 SerDes reset logic may encounter instability issues during application. Lattice provides a workaround to resolve this issue, which can be found in the Workaround for Lattice ECP5 (LFE5UM) Known Issue with SerDes Interface Connections Due to Unstable Reset Soft Logic (FPGA-PB-02001) document.

©2014-2023 Lattice Semiconductor Corp. All Lattice trademarks, registered trademarks, patents, and disclaimers are as listed at www.latticesemi.com/legal.
All other brand or product names are trademarks or registered trademarks of their respective holders. The specifications and information herein are subject to change without notice.

6. Standards Supported

The supported standards are listed in Table 6.1.

Table 6.1. Standards Supported by the SerDes/PCS

Standard	Data Rate (Mb/s)	System Reference Clock (MHz)	FPGA Clock (MHz)	Number of Link Width	Encoding Style
PCI Express 1.1	2500	100	250	x1, x2, x4	8b10b
PCI Express 2.0[2]	5000	200	250	x1, x2	8b10b
Gigabit Ethernet SGMII	1250	62.5	125	x1	8b10b
	2500	125	250	x1	8b10b
	3125	156.25	156.25	x1	8b10b
XAUI	3125	156.25	156.25	x4	8b10b
CPRI-E.6.LV	614.4	61.44	61.44	x1	8b10b
E.12.LV	1228.8	61.44, 122.88	122.88		
E.24.LV	2457.6	122.88	122.88		
E.30.LV	3072	153.6	153.6		
E.48.LV[1]	4915.2	245.76	122.88		
SD-SDI (259M, 344M)	270, 540	54	27	x1	NRZI/Scrambled
HD-SDI (292M)	1483.5	74.175, 148.35	74.175, 148.35	x1	NRZI/Scrambled
	1485	74.25, 148.50	74.25, 148.5		
3G-SDI (424M)	2967	148.35	148.35	x1	NRZI/Scrambled
	2970	148.5	148.5		
eDP-RBR	1620	160	160	x1, x2, x4	8b10b
HBR	2700	135	135	x1, x2, x4	8b10b
JESD204A/B[1]	312.5–3125/5000	31.25–156.25/250	31.25–156.25/250	—	—
10-Bit SerDes[1]	270–3200/5000	27–160/320	27–160/320	x1, x2, x3, x4	N/A
8-Bit SerDes[1]	270–3200/5000	27–160/320	27–160/320	x1, x2, x3, x4	N/A
Generic 8b10b[1]	270–3200/5000	27–160/320	27–160/320	x1, x2, x3, x4	8b10b

Notes:

1. Data Rates > 3.125 Gb/s are only supported in the ECP5-5G device family.
2. Represents the reference clock frequency of TxPLL and CDR.

©2014-2023 Lattice Semiconductor Corp. All Lattice trademarks, registered trademarks, patents, and disclaimers are as listed at www.latticesemi.com/legal.
All other brand or product names are trademarks or registered trademarks of their respective holders. The specifications and information herein are subject to change without notice.

7. Architecture Overview

The SerDes/PCS block is arranged in duals containing logic for two full-duplex data channels. Figure 7.1 shows the arrangement of SerDes/PCS duals on the LFE5UM-85/LFE5UM5G-85.

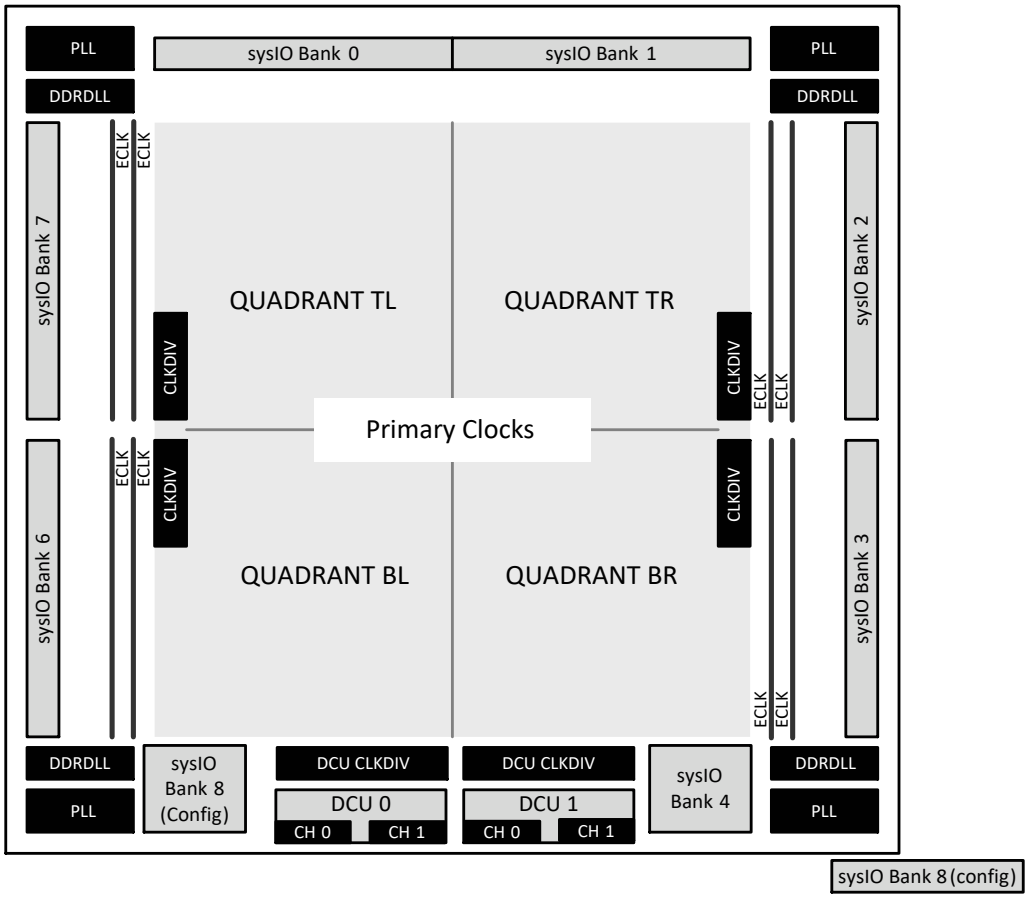

Figure 7.1. LFE5UM-85/LFE5UM5G-85 Block Diagram

Table 7.1 shows the number of available SerDes/PCS channels for each LFE5UM/LFE5UM5G device.

Table 7.1. Number of SerDes/PCS Channels Per LFE5UM/LFE5UM5G Device

Package	LFE5UM-25/LFE5UM5G-25	LFE5UM-45 LFE5UM5G-45	LFE5UM-85/LFE5UM5G-85
SerDes/PCS DCUs	1	2	2
SerDes/PCS Channels	2	4	4

LFE5UM/LFE5UM5G SerDes block is defined by a dual base architecture (DCU). Each DCU includes two SerDes/PCS full-duplex Rx/Tx channels, and one common AUX channel between the two SerDes channels that consists of one TX PLL and the associated EXTREF block.

Every DCU can be programmed into one of several protocol-based modes. Each dual requires its reference clock which can be sourced externally from package pins (refclkp/refclkn) or internally from the FPGA logic.

Each dual can be programmed with selected protocols that have nominal frequencies which can utilize the full and half-rate options per channel. For example, a PCI Express x1 at 2.5 Gb/s and a Gigabit Ethernet channel can share the same dual using the half-rate option on the Gigabit Ethernet channel. When a dual shares a PCI Express x1 channel with a non-PCI Express channel, the reference clock for the dual must be compatible with all protocols within the dual. For example, a PCI Express spread spectrum reference clock is not compatible with most Gigabit Ethernet applications.

©2014-2023 Lattice Semiconductor Corp. All Lattice trademarks, registered trademarks, patents, and disclaimers are as listed at www.latticesemi.com/legal.
All other brand or product names are trademarks or registered trademarks of their respective holders. The specifications and information herein are subject to change without notice.

Since each dual has its own reference clock, different duals can support different standards on the same chip. This feature makes the LFE5UM/LFE5UM5G device family ideal for bridging between different standards.

PCS duals are not dedicated solely to industry standard protocols. Each dual (and each channel within a dual) can be programmed for many user-defined data manipulation modes. For example, word alignment and clock tolerance compensation can be programmed for user-defined operations.

Figure 7.2 shows a simplified block diagram of two DCUs.

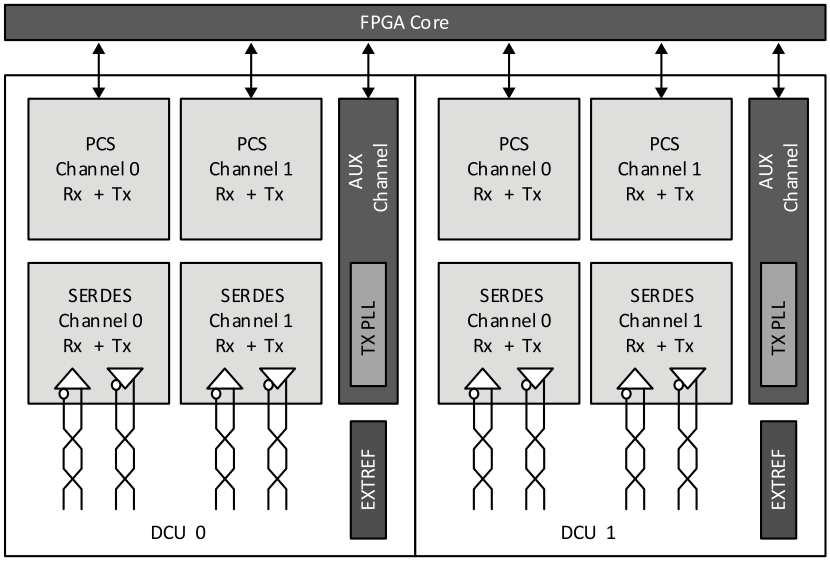

Figure 7.2. Simplified Block Diagram of Two DCUs in LFE5UM-45/LFE5UM5G-45 and LFE5UM-85/LFE5UM5G-85

Figure 7.3 shows the hardware arrangement of two dual and the sharing of clocking resources.

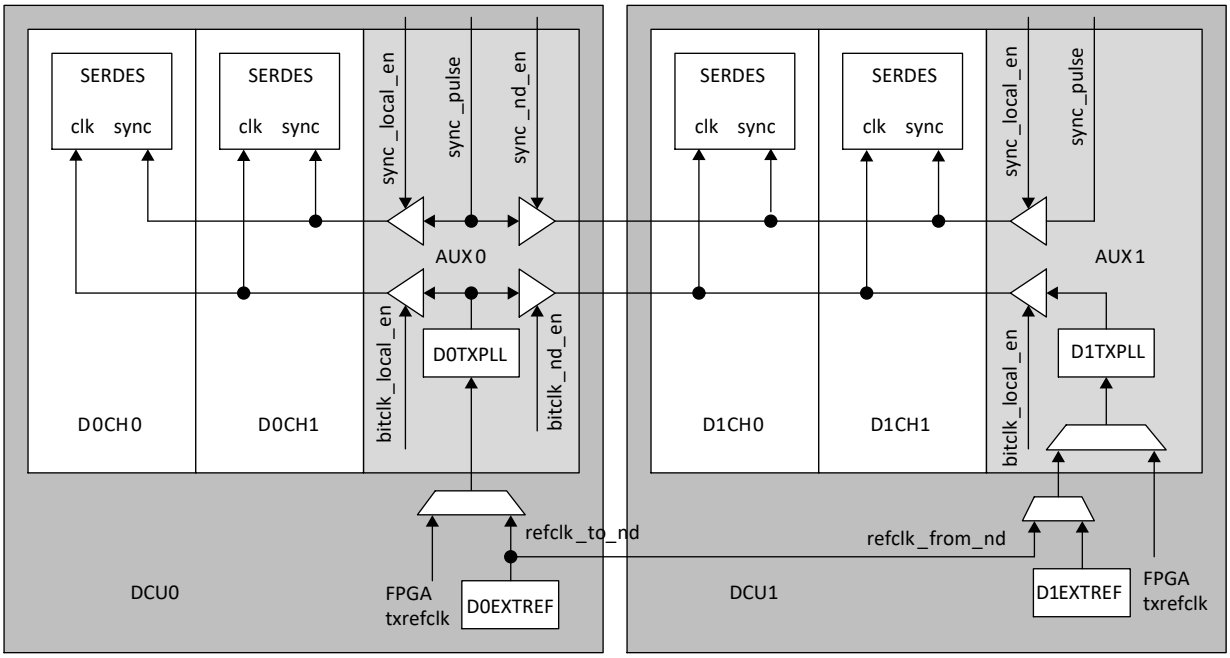

Figure 7.3. Two DCUs Pair with Clock Sharing

When implementing an X4 link (such as XAUI X4, or PCIe X4), one DCU Aux channel resource can be shared between two adjacent DCUs with the clock structure shown in Figure 7.3.

©2014-2023 Lattice Semiconductor Corp. All Lattice trademarks, registered trademarks, patents, and disclaimers are as listed at www.latticesemi.com/legal.
All other brand or product names are trademarks or registered trademarks of their respective holders. The specifications and information herein are subject to change without notice.

7.1. Multi-Protocol Design Consideration

The dual-channel-based DCU architecture in LFE5UM/LFE5UM5G serves the purpose of providing more flexibility to you in implementing different protocols. This is achieved by sharing resources across different DCUs when a wide interface is needed across two DCUs. Also, the LFE5UM/LFE5UM5G DCUs allow sharing of the same DCU with different protocols, provided the protocols have data rates that are a multiplicity of each other.

Different combinations of protocols within a DCU are permitted subject to certain conditions. One of the most basic requirements for two protocols sharing the same DCU is that the two protocols must have data-rate that are either the same or can be divided by the rate divider (Div1, Div2, Div11). This restriction is due to these two protocols sharing the same clock from the TxPLL.

A transmit clock derived from the TxPLL in DCU0 can be extended to drive the complementary neighboring DCU1 channels, providing the capability of the TxPLL of DCU0 to be used by four channels. This allows the implementation of the X4 link to be easily achievable.

Table 7.2 lists the support of mixed protocols within a DCU.

Table 7.2. LFE5UM/LFE5UM5G Mixed Protocol Pair

Protocol		Protocol
SGMII	&	GbE
PCIe 1.1	&	GbE
PCIe 1.1	&	SGMII
SD/HD/3G SDI	&	SD/HD/3G SDI
PCIe 1.1	&	PCIe 1.1
PCEe 2.0[1]	&	PCEe 2.0[1]
PCIe 1.1/2.0[1]	&	PCIe 1.1/2.0[1]
JESD204A/B	&	JESD204A/B
CPRI E6/E12	&	CPRI E6/E12
CPRI E12/E24[1]	&	CPRI E12/E24[1]
CPRI E24/E48	&	CPRI E24/E48

Note:

1. Supported only in the ECP5-5G device family.

PCIe must be without spread spectrum to share with other protocols in the same DCU.

7.2. Detailed Channel Block Diagram

Figure 7.4 shows a detailed block diagram representation of the major functionality in a single channel of the LFE5UM/LFE5UM5G SerDes/PCS. This diagram shows all the major blocks and the majority of the control and status signals that are visible to the user logic in the FPGA. This diagram also shows the major sub-blocks in the channel – SerDes, SerDes Bridge, PCS Core, and the FPGA Bridge.

©2014-2023 Lattice Semiconductor Corp. All Lattice trademarks, registered trademarks, patents, and disclaimers are as listed at www.latticesemi.com/legal.
All other brand or product names are trademarks or registered trademarks of their respective holders. The specifications and information herein are subject to change without notice.

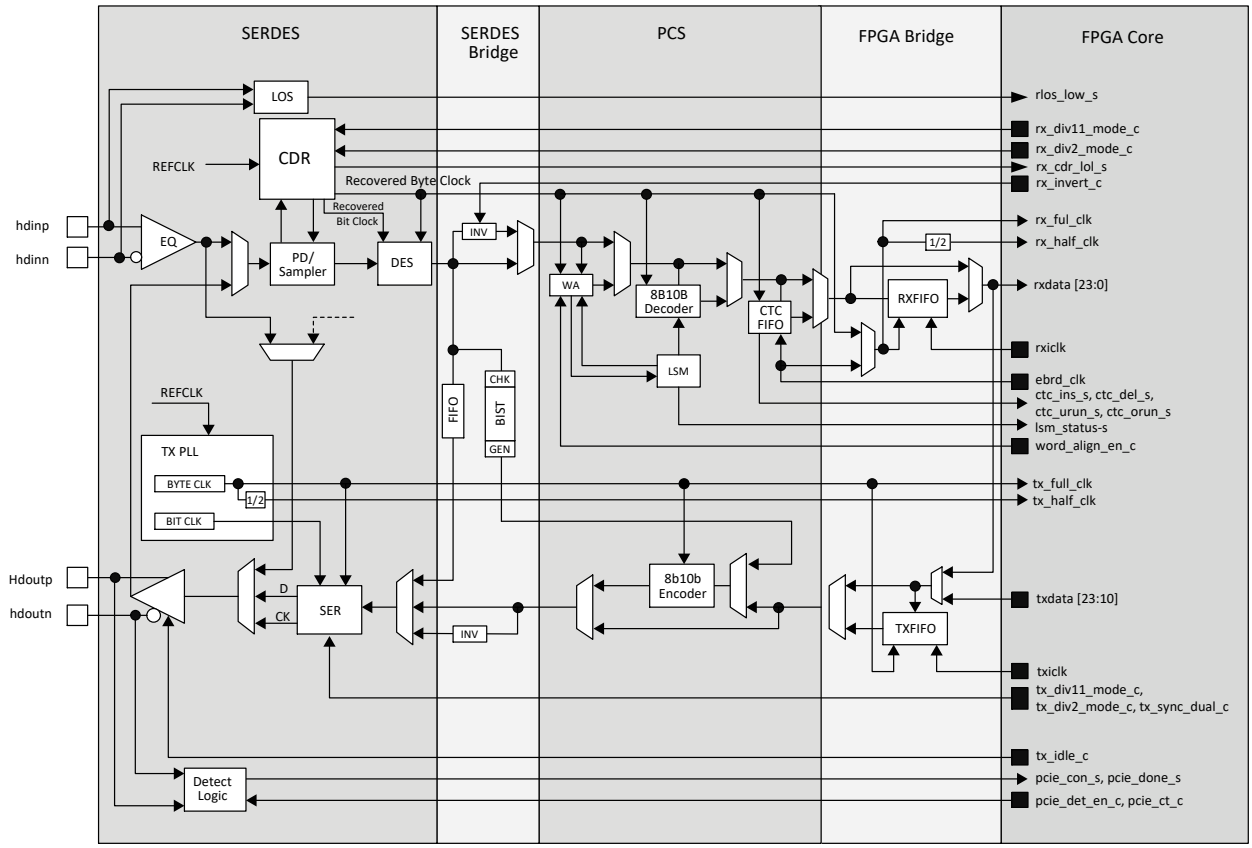

Figure 7.4. LFE5UM/LFE5UM5G SerDes/PCS Detailed Channel Block Diagram

7.3. Clocks and Resets

A SerDes/PCS dual supplies per-channel locked reference clocks and per-channel recovered receive clocks to the FPGA logic interface. Each dual provides clocks on both primary and secondary FPGA clock routing. The PCS/FPGA interface also has ports for the transmit clock (one per dual) and receive clocks (one per channel) supplied from the FPGA fabric.

Each dual has reset inputs to force a reset of both or individual on the SerDes and PCS logic in a dual. In addition, separate resets are provided to reset the clock generation of the Rx and Tx channels. When the clock generation is reset (either in Tx or Rx, or both), the corresponding SerDes logic needs to be reset for the SerDes logic and PCS logic to be synchronized.

7.4. Transmit Data Bus

The signals for the transmit data path are from the FPGA to the FPGA Bridge in the PCS Block. The data path can be geared 2:1 to the internal PCS data path, which is 8-bit wide (plus control/status signals). The highest speed of the interface for PCI Express x1 is 250 MHz in 1:1 geared mode. With 2:1 gearing (that is a 16-bit wide data path), the interface clock speed is 156.25 MHz (for XAUI 4x channel mode). The SerDes and PCS support data rates up to 3.2 Gb/s that correspond to an interface speed of 160 MHz (with 2:1 gearing).

©2014-2023 Lattice Semiconductor Corp. All Lattice trademarks, registered trademarks, patents, and disclaimers are as listed at www.latticesemi.com/legal.
All other brand or product names are trademarks or registered trademarks of their respective holders. The specifications and information herein are subject to change without notice.

7.5. Receive Data Bus

The signals for the receive path are from the FPGA Bridge in the PCS Block to the FPGA. The data path may be geared 2:1 to the internal PCS data path which is 8-bit wide. The data bus width at the FPGA interface is 16-bit wide. When the data is geared 2:1, the lower bits (rxdata[9:0] or rxdata[7:0]) correspond to the word that has been received first and the higher bits (rxdata[19:10] or rxdata[15:8]) correspond to the word that has been received second. Table 7.3 describes the use of the data bus for each protocol mode.

The 2:1 gearing in LFE5UM/LFE5UM5G can be configured as user-controlled through the FPGA logic. This allows you to change the gearing from the core when different rates in the protocol are selected (for example, HD-SDI and 3G-SDI). Table 7.3 shows how the signals are assigned in different protocols (channel 0 is shown as an example).

Table 7.3. Data Bus Usage by Mode

<table>
<tr><th>Data Bit (ff_tx_d[23:0])</th><th>10BSER</th><th>SDI</th><th>8BSER</th><th>PCIe</th><th>G8B10B</th><th>CPRI</th><th>JESD204</th><th>eDP</th><th>Gbe</th><th>SGMII</th><th>XAUI</th></tr>
<tr><td>ff_tx_d_0_0</td><td colspan="11">tx_data_ch0[0]</td></tr>
<tr><td>ff_tx_d_0_1</td><td colspan="11">tx_data_ch0[1]</td></tr>
<tr><td>ff_tx_d_0_2</td><td colspan="11">tx_data_ch0[2]</td></tr>
<tr><td>ff_tx_d_0_3</td><td colspan="11">tx_data_ch0[3]</td></tr>
<tr><td>ff_tx_d_0_4</td><td colspan="11">tx_data_ch0[4]</td></tr>
<tr><td>ff_tx_d_0_5</td><td colspan="11">tx_data_ch0[5]</td></tr>
<tr><td>ff_tx_d_0_6</td><td colspan="11">tx_data_ch0[6]</td></tr>
<tr><td>ff_tx_d_0_7</td><td colspan="11">tx_data_ch0[7]</td></tr>
<tr><td>ff_tx_d_0_8</td><td colspan="2">tx_data_ch0[8]</td><td rowspan="4">GND</td><td colspan="6">tx_k_ch0[0]</td><td>tx_k_ch0[0]</td></tr>
<tr><td>ff_tx_d_0_9</td><td colspan="2">tx_data_ch0[9]</td><td colspan="5">tx_force_correct_ch0[0] [1]</td><td colspan="2">GND</td><td rowspan="4">GND</td></tr>
<tr><td>ff_tx_d_0_10</td><td colspan="2" rowspan="2">GND</td><td colspan="5">tx_disp_sel_ch0[0][1]</td><td colspan="2">xmit_ch0[0][2]</td></tr>
<tr><td>ff_tx_d_0_11</td><td>pcie_ei_ en_ch0[0]</td><td colspan="4">GND</td><td colspan="2">tx_disp_correct_ch0[0]</td></tr>
<tr><td>ff_tx_d_0_12</td><td colspan="2">tx_data_ch0[10]</td><td colspan="9">txdata_ch0[8]</td></tr>
<tr><td>ff_tx_d_0_13</td><td colspan="2">tx_data_ch0[11]</td><td colspan="9">txdata_ch0[9]</td></tr>
<tr><td>ff_tx_d_0_14</td><td colspan="2">tx_data_ch0[12]</td><td colspan="9">txdata_ch0[10]</td></tr>
<tr><td>ff_tx_d_0_15</td><td colspan="2">tx_data_ch0[13]</td><td colspan="9">txdata_ch0[11]</td></tr>
<tr><td>ff_tx_d_0_16</td><td colspan="2">tx_data_ch0[14]</td><td colspan="9">txdata_ch0[12]</td></tr>
<tr><td>ff_tx_d_0_17</td><td colspan="2">tx_data_ch0[15]</td><td colspan="9">txdata_ch0[13]</td></tr>
<tr><td>ff_tx_d_0_18</td><td colspan="2">tx_data_ch0[16]</td><td colspan="9">txdata_ch0[14]</td></tr>
<tr><td>ff_tx_d_0_19</td><td colspan="2">tx_data_ch0[17]</td><td colspan="9">txdata_ch0[15]</td></tr>
<tr><td>ff_tx_d_0_20</td><td colspan="2">tx_data_ch0[18]</td><td rowspan="4">GND</td><td colspan="8">tx_k_ch0[1]</td><td>txc_ch0[1]</td></tr>
<tr><td>ff_tx_d_0_21</td><td colspan="2">tx_data_ch0[19]</td><td colspan="7">tx_force_disp_ch0[1][1]</td><td>GND</td><td rowspan="4">GND</td></tr>
<tr><td>ff_tx_d_0_22</td><td colspan="2" rowspan="2">GND</td><td colspan="7">tx_disp_sel_ch0[1][1]</td><td>xmit_ch0[1][2]</td></tr>
<tr><td>ff_tx_d_0_23</td><td>pcie_ei_ en_ch0[1]</td><td colspan="5">GND</td><td>tx_disp_correct_ch0[1]</td></tr>
<tr><td>ff_rx_d_0_0</td><td colspan="11">rxdata_ch0[0]</td></tr>
<tr><td>ff_rx_d_0_1</td><td colspan="11">rxdata_ch0[1]</td></tr>
<tr><td>ff_rx_d_0_2</td><td colspan="11">rxdata_ch0[2]</td></tr>
<tr><td>ff_rx_d_0_3</td><td colspan="11">rxdata_ch0[3]</td></tr>
<tr><td>ff_rx_d_0_4</td><td colspan="11">rxdata_ch0[4]</td></tr>
<tr><td>ff_rx_d_0_5</td><td colspan="11">rxdata_ch0[5]</td></tr>
<tr><td>ff_rx_d_0_6</td><td colspan="11">rxdata_ch0[6]</td></tr>
<tr><td>ff_rx_d_0_7</td><td colspan="11">rxdata_ch0[7]</td></tr>
</table>

©2014-2023 Lattice Semiconductor Corp. All Lattice trademarks, registered trademarks, patents, and disclaimers are as listed at www.latticesemi.com/legal.
All other brand or product names are trademarks or registered trademarks of their respective holders. The specifications and information herein are subject to change without notice.

<table>
<tr><th>Data Bit (ff_tx_d[23:0])</th><th>10BSER</th><th>SDI</th><th>8BSER</th><th>PCIe</th><th>G8B10B</th><th>CPRI</th><th>JESD204</th><th>eDP</th><th>Gbe</th><th>SGMII</th><th>XAUI</th></tr>
<tr><td>ff_rx_d_0_8</td><td colspan="2">rxdata_ch0[8]</td><td rowspan="4">NC</td><td colspan="8">rk_k_ch0[0]</td><td>rxc_ch0[0]</td></tr>
<tr><td rowspan="2">ff_rx_d_0_9</td><td colspan="2" rowspan="2">rxdata_ch0[9]</td><td>rstatus0_ch0[0]</td><td colspan="7">rk_disp_err_ch0[0]</td></tr>
<tr><td colspan="2" rowspan="2">NC</td></tr>
<tr><td>ff_rx_d_0_10</td><td>rstatus0_ch0[1]</td><td colspan="7">rk_cv_err_ch0[0][3]</td></tr>
<tr><td>ff_rx_d_0_11</td><td>rstatus0_ch0[2]</td><td colspan="7">NC</td></tr>
<tr><td>ff_rx_d_0_12</td><td colspan="2">rxdata_ch0[10]</td><td colspan="10">rxdata_ch0[8]</td></tr>
<tr><td>ff_rx_d_0_13</td><td colspan="2">rxdata_ch0[11]</td><td colspan="10">rxdata_ch0[9]</td></tr>
<tr><td>ff_rx_d_0_14</td><td colspan="2">rxdata_ch0[12]</td><td colspan="10">rxdata_ch0[10]</td></tr>
<tr><td>ff_rx_d_0_15</td><td colspan="2">rxdata_ch0[13]</td><td colspan="10">rxdata_ch0[11]</td></tr>
<tr><td>ff_rx_d_0_16</td><td colspan="2">rxdata_ch0[14]</td><td colspan="10">rxdata_ch0[12]</td></tr>
<tr><td>ff_rx_d_0_17</td><td colspan="2">rxdata_ch0[15]</td><td colspan="10">rxdata_ch0[13]</td></tr>
<tr><td>ff_rx_d_0_18</td><td colspan="2">rxdata_ch0[16]</td><td colspan="10">rxdata_ch0[14]</td></tr>
<tr><td>ff_rx_d_0_19</td><td colspan="2">rxdata_ch0[17]</td><td colspan="10">rxdata_ch0[15]</td></tr>
<tr><td>ff_rx_d_0_20</td><td colspan="2">rxdata_ch0[18]</td><td rowspan="4">NC</td><td colspan="8">rk_k_ch0[1]</td><td>rxc_ch0[1]</td></tr>
<tr><td rowspan="2">ff_rx_d_0_21</td><td colspan="2" rowspan="2">rxdata_ch0[19]</td><td>rstatus0_ch0[0]</td><td colspan="7">rk_disp_err_ch0[0]</td></tr>
<tr><td colspan="2" rowspan="2">NC</td></tr>
<tr><td>ff_rx_d_0_22</td><td>rstatus0_ch0[1]</td><td colspan="7">rk_cv_err_ch0[0][3]</td></tr>
<tr><td>ff_rx_d_0_23</td><td>rstatus0_ch0[2]</td><td colspan="7">NC</td></tr>
</table>

Notes:

1. The force_disp signal forces the disparity for the associated data word on bits [7:0] to the column selected by the tx_disp_sel signal. If disp_sel is a one, the 10-bit code is taken from the 'current RD+' column (positive disparity). If the tx_disp_sel is a zero, the 10-bit code is taken from the 'current RD-' (negative disparity) column.
2. The Lattice Gigabit Ethernet PCS IP core provides an auto-negotiation state machine that generates the signal xmit. It is used to interact with the Gigabit Ethernet Idle State Machine in the hard logic.
3. When there is a code violation, the packet PCS 8b10b decoder replaces the output from the decoder with hex EE and K asserted (K=1 and d=EE are not part of the 8b10b coding space).
4. FF_TX_D_0_0: FPGA Fabric Transmit Data Bus Channel 0 Bit 0.

7.6. Control and Status Signals

Table 7.4 describes the control and status signals.

Table 7.4. Control and Status Signals and their Functions

Signal Name	Description
Transmit Control Signals	
tx_k_ch[1:0]	Per channel, active-high control character indicator.
tx_force_disp_ch[1:0]	Per channel, active-high signal which instructs the PCS to accept disparity value from disp_sel_ch[1:0] input.
tx_disp_sel_ch[1:0]	Per channel, disparity value is supplied from FPGA logic. Valid when force_disp_ch[1:0] is HIGH.
tx_correct_disp_ch[1:0]	Corrects disparity identifier when asserted by adjusting the 8B10B encoder to begin in the negative disparity state.
Receive Status Signals	
rx_k_ch[1:0]	Per channel, active-high control character indicator.
rx_disp_err_ch[1:0]	Per channel, an active-high signal driven by the PCS to indicate a disparity error was detected with the associated data.
rx_cv_err_ch[1:0]	Per channel, a code violation signal to indicate an error was detected with the associated data.

©2014-2023 Lattice Semiconductor Corp. All Lattice trademarks, registered trademarks, patents, and disclaimers are as listed at www.latticesemi.com/legal.
All other brand or product names are trademarks or registered trademarks of their respective holders. The specifications and information herein are subject to change without notice.

7.6.1. Control Signals

Each mode has its own set of control signals which allows direct control of various PCS features from the FPGA logic. In general, each of these control inputs duplicates the effect of writing to a corresponding control register bit or bits.

{signal}_c is the control signal from the FPGA core to the FPGA bridge. All of the control signals are used asynchronously inside the SerDes/PCS.

7.6.2. Status Signals

Each mode has its own set of status or alarm signals that can be monitored by the FPGA logic. In general, each of these status outputs corresponds to a specific status register bit or bits. The Diamond design tools give you the option to bring these ports out to the PCS FPGA interface.

{signal}_s is the status of the signal to the FPGA core from the FPGA bridge. All of the status signals are asynchronous from the SerDes/PCS. These should be synchronized to a clock domain before they are used in the FPGA design.

See the Control and Status Signals section for detailed information about these signals.

7.7. SerDes/PCS

The DCU contains two channels with both Rx and Tx circuits and an auxiliary channel that contains the TX PLL. The reference clock to the TX PLL can be provided either by the primary differential reference clock pins or by the FPGA core. The dual SerDes/PCS macro performs the serialization and de-serialization function for two lanes of data. In addition, the TXPLL within the DCU provides the system clock for the FPGA logic. The dual also supports both full-data-rate and half-data-rate modes of operation on each Tx and Rx circuit independently. The block-level diagram is shown in Figure 7.5.

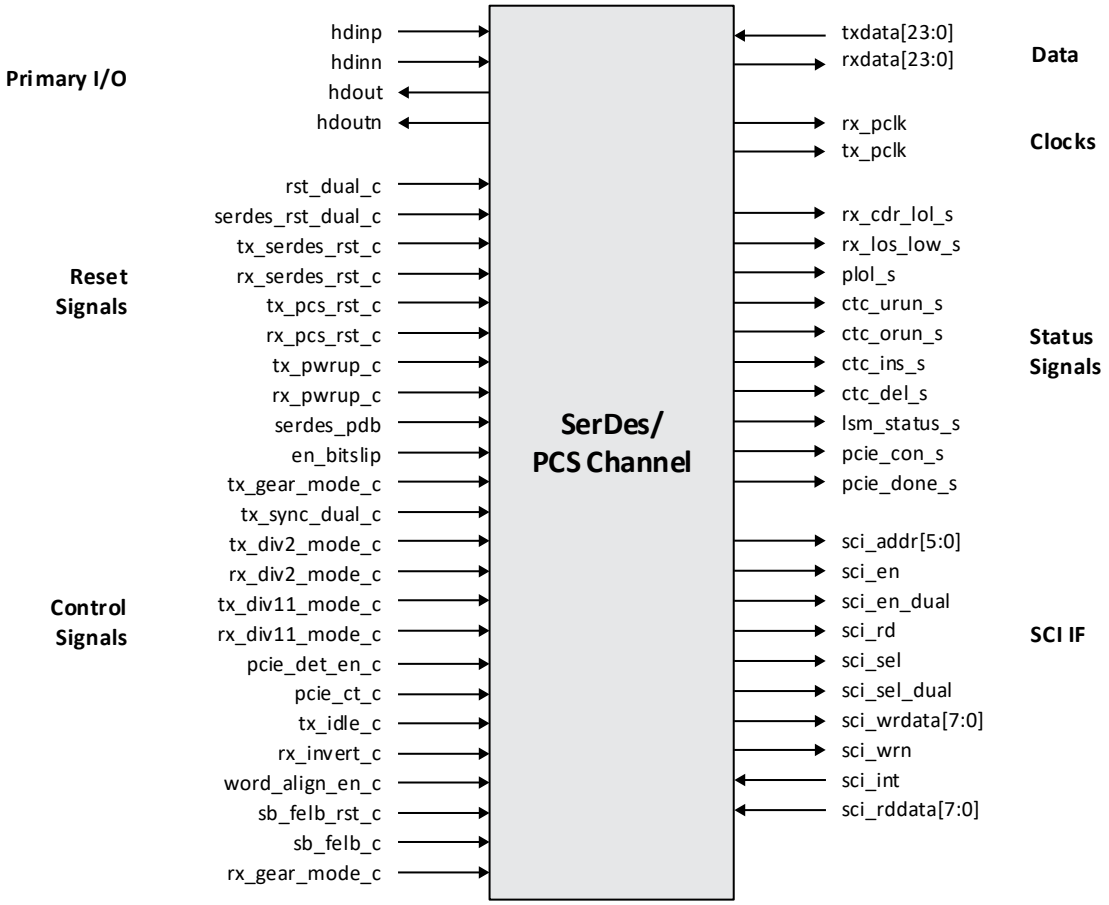

Figure 7.5. SerDes/PCS Block Signal Interface

©2014-2023 Lattice Semiconductor Corp. All Lattice trademarks, registered trademarks, patents, and disclaimers are as listed at www.latticesemi.com/legal.
All other brand or product names are trademarks or registered trademarks of their respective holders. The specifications and information herein are subject to change without notice.

7.8. I/O Descriptions

Table 7.5 lists all default and optional inputs and outputs to/from a dual.

Table 7.5. SerDes/PCS I/O Descriptions

Signal Name	I/O	Type	Description
Primary I/O, SerDes Dual			
hdinp	I	CH	High-speed Input, positive
hdinn	I	CH	High-speed Input, negative
hdoutp	O	CH	High-speed Output, positive
hdoutn	O	CH	High-speed Output, negative
Transmit/Receive Data Bus (See Table 7.2 and Table 7.3 for detailed data bus usage)			
rxdata[23:0]	O	CH	Received Data
txdata[23:0]	I	CH	Transmit Data
Control Signals			
tx_sync_dual_c	I	DL	Serializer Reset Rising Edge Transition = Reset Level = Normal Operation
tx_div2_mode_c	I	CH	Transmit Rate Mode (Full Rate/Half Rate) Select 1 – Half Rate 0 – Full Rate
rx_div2_mode_c	I	CH	Receive Rate Mode (Full Rate/Half Rate) Select 1 – Half Rate 0 – Full Rate
tx_div11_mode_c	I	CH	Transmitter Rate Mode Select (SDI protocol only) 1 – Div11 Rate 0 – Full Rate
rx_div11_mode_c	I	CH	Receiver Rate Mode Select (SDI protocol only) 1: Div1 1 – Rate 0 – Full Rate
pcie_det_en_c	I	CH	FPGA logic (user logic) informs the SerDes block that it is requesting a PCI Express Receiver Detect operation. 1 – Enable PCI Express Receiver Detect
pcie_ct_c	I	CH	1 – Request transmitter to do far-end receiver detection 0 – Normal data operation
tx_idle_c	I	CH	0 – Normal operation
rx_invert_c	I	CH	Control the inversion of received data. 1 – Invert the data 0 – Do not invert the data
tx_gear_mode_c	I	CH	Transmit Gearing Mode Select (OR'ed with tx_data_width setting. Use with tx_data_width = 0) 1 – 16/20-Bit Mode 0 – 8/10-Bit Mode
rx_gear_mode_c	I	CH	Receiver Gearing Mode Select (OR'ed with rx_data_width setting. Use with rx_data_width = 0) 1 – 16/20-Bit Mode 0 – 8/10-Bit Mode
word_align_en_c	I	CH	Control Comma Aligner 1 – Enable comma aligner 0 – Lock comma aligner at current position
sb_felb_ c	I	CH	SerDes Bridge Parallel Loopback 1 – Enable loopback from RX to TX 0 – Normal data operation

©2014-2023 Lattice Semiconductor Corp. All Lattice trademarks, registered trademarks, patents, and disclaimers are as listed at www.latticesemi.com/legal.
All other brand or product names are trademarks or registered trademarks of their respective holders. The specifications and information herein are subject to change without notice.

Signal Name	I/O	Type	Description
sb_felb_rst_c	I	CH	SerDes Bridge Parallel Loopback FIFO Clear 1 – Reset Loopback FIFO 0 – Normal loopback operation
en_bitslip	I	CH	SerDes Word Alignment to shift byte clock by 1 UI 1 – Slip Rx byte clock by 1 UI for Word Alignment 0 – No slip
Status Signals			
rx_cdr_lol_s	O	CH	1 – Receive CDR Loss of Lock 0 – Lock maintained
rx_los_low_s	O	CH	Loss of Signal (LO THRESHOLD RANGE) detection for each channel.
ctc_urun_s	O	CH	1 – Receive clock compensator FIFO underrun error 0 – No FIFO errors
ctc_orun_s	O	CH	1 – Receive clock compensator FIFO overrun error 0 – No FIFO errors
ctc_ins_s	O	CH	1 – SKIP Character Added by CTC
ctc_del_s	O	CH	1 – SKIP Character Deleted by CTC
lsm_status_s	O	CH	1 – Lane is synchronized to commas 0 – Lane has not found a comma
pcie_con_s	O	CH	Result of Far-end Receiver Detection 1 – Far end receiver detected 0 – Far end receiver not detected
pcie_done_s	O	CH	1 – Far-end receiver detection complete 0 – Far-end receiver detection incomplete
rst_dual_c	I	DL	Active High Asynchronous Input. Resets all SerDes channels including the auxiliary channel and PCS.
serdes_rst_dual_c	I	DL	Active High, Asynchronous Input to SerDes Dual. Gated with software register bit fpga_reset_enable. By default fpga_reset_enable is ‘1’.
tx_serdes_rst_c	I	DL	Resets LOL signal in PLL.
rx_serdes_rst_c	I	CH	Resets selected digital logic in the SerDes Receive channels.
tx_pcs_rst_c	I	CH	Active High Asynchronous Input. Resets individual Dual TX channel logic only in PCS.
rx_pcs_rst_c	I	CH	Active High Asynchronous Input. Resets individual Dual RX channel logic only in PCS.
serdes_pdb	I	DL	Power down control for entire SerDes dual including AUX and channels 0 – Power down 1 – Power up
tx_pwrup_c	I	CH	Active low Transmit Channel Power Down 0 – Transmit Channel should be powered down
rx_pwrup_c	I	CH	Active low Receive Channel Power Down 0 – Receive Channel should be powered down
Clocks			
rx_pclk	O	CH	Receive Channel Recovered Primary Clock. Direct connection to Primary clock network. When gearing is not enabled, this output equals the received full rate clock. When 2:1 gearing is enabled, it is a divide-by-2 half-rate clock.
tx_pclk	O	CH	Transmit Primary Clock. Direct connection to Primary clock network. When gearing is not enabled, this output equals the transmit full rate clock. When 2:1 gearing is enabled, it is a divide-by-2 half-rate clock.

©2014-2023 Lattice Semiconductor Corp. All Lattice trademarks, registered trademarks, patents, and disclaimers are as listed at www.latticesemi.com/legal.
All other brand or product names are trademarks or registered trademarks of their respective holders. The specifications and information herein are subject to change without notice.

Signal Name	I/O	Type	Description
SCI Interface Signals			
sci_sel_dual	I	DL	SCI Aux Channel Select
sci_en_dual	I	DL	SCI Aux Channel Enable
sci_en	I	CH	SCI Channel Enable
sci_sel	I	CH	SCI Channel Select
sci_wrdata[7:0]	I	CH	SCI Write Data
sci_rddata[7:0]	O	CH	SCI Read Data Bus
sci_wrn	I	CH	SCI Write Strobe
sci_rd	I	CH	SCI Read Data Select
sci_addr[5:0]	I	CH	SCI Address Bus
sci_int	O	CH	SCI Interrupt Output

©2014-2023 Lattice Semiconductor Corp. All Lattice trademarks, registered trademarks, patents, and disclaimers are as listed at www.latticesemi.com/legal.
All other brand or product names are trademarks or registered trademarks of their respective holders. The specifications and information herein are subject to change without notice.

8. SerDes/PCS Functional Description

LFE5UM/LFE5UM5G devices have one to two duals of embedded SerDes/PCS logic. Each dual, in turn, supports two independent full-duplex data channels. A single channel can support a data link and each dual can support up to two such channels.

The embedded SerDes CDR PLLs and TX PLLs support data rates that cover a wide range of industry-standard protocols.

Refer to Figure 7.4 for each of the items below.

- SerDes Buffers
  - Output Driver
  - Differential Receiver
- SerDes
  - Linear Equalizer (LEQ)
  - CDR (Clock and Data Recovery)
  - Deserializer
  - De-emphasis
  - Serializer
  - Two Serial Loopback Modes, TX-to-RX or RX-to-TX
- SerDes Bridge (SB)
  - Inverter: Inverts receive data, as required by PCI Express
  - SerDes Bridge Parallel Loopback
- PCS Core
  - Word Alignment
  - 8b10b Decoder
  - 8b10b Encoder
  - Link State Machine
  - Clock Tolerance Compensation
- FPGA Bridge (FB)
  - Downsample FIFO
  - Upsample FIFO

8.1. SerDes Buffers

8.1.1. Tx Differential Output Driver

The TX output buffer is a high-speed line driver and is used to send serialized data off-chip. It includes functions such as variable amplitude settings, variable termination resistance values, and various pre/post-cursor de-emphasis settings. TX output buffer has an H-Bridge structure as shown in Figure 8.1. This provides lower power consumption to reduce overall TX power. The output voltage swing is maintained by having a separate power supply pad for the driver only (VCCHTX). PCI Express requirements for electrical idle and receiver detection are implemented in TX driver and output pads.

Figure 8.1 shows the Transmitter H-Bridge Driver with the differential termination, pre and post-cursor, and associated current sources.

©2014-2023 Lattice Semiconductor Corp. All Lattice trademarks, registered trademarks, patents, and disclaimers are as listed at www.latticesemi.com/legal.
All other brand or product names are trademarks or registered trademarks of their respective holders. The specifications and information herein are subject to change without notice.

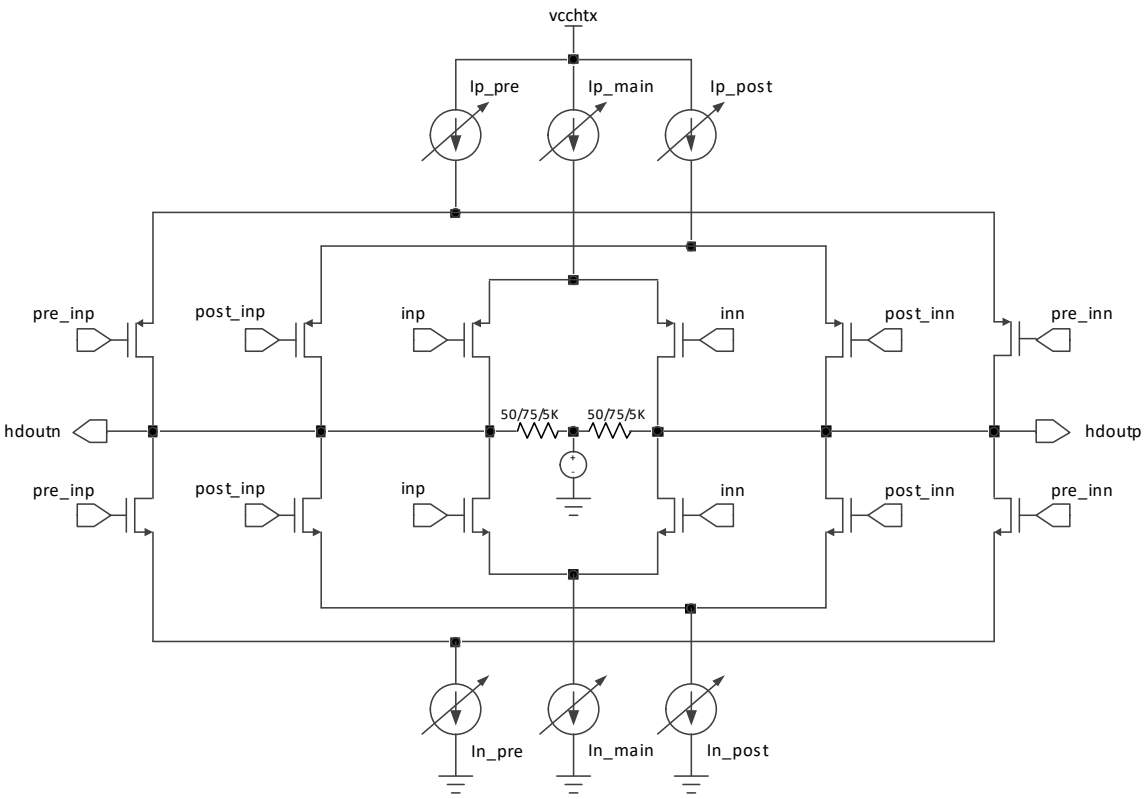

Figure 8.1. Transmitter H-Bridge Driver with Termination and De-emphasis

8.2. SerDes

8.2.1. Linear Equalizer

The Linear Equalizer (LEQ) is used to equalize the channel loss. Generally, this is used to selectively amplify the high-frequency components which are attenuated more over a long backplane– similar to the function performed by De-emphasis on the transmitter. As the data rate of the transmission advances over multi-Gb/s, frequency-dependent attenuation can cause severe InterSymbol Interference (ISI) in the received signal. LEQ performs the recovery of the signal from interference. Four levels of Equalization can be selected, based on the user transmission channel conditions.

8.2.2. De-emphasis

De-emphasis refers to a systematic process designed to increase the magnitude of some frequencies to the magnitude of other frequencies. De-emphasis improves the overall signal-to-noise ratio by minimizing the adverse effects of such phenomena as attenuation differences.

LFE5UM/LFE5UM5G SerDes Transmit channel provides +/– one tap for de-emphasis (pre-cursor and post cursor). Both taps can be programmed individually, to provide 12 settings in each.

8.2.3. Reference Clocks

The SerDes dual contains two channels with both Rx and Tx circuits and an auxiliary channel that contains the TX PLL. The reference clock to the TX PLL can be provided either by the primary differential reference clock pins, by the neighbor dual's reference clock, or by the FPGA core. In addition, the PLL within the SerDes block provides an output clock that can be used as the system clock driving the FPGA fabric.

The reference clock to the Rx can be provided either by the reference clock to the TX PLL or by the FPGA core. The reference clocks from the FPGA core to the TX PLL and the Rx may come from different sources.

©2014-2023 Lattice Semiconductor Corp. All Lattice trademarks, registered trademarks, patents, and disclaimers are as listed at www.latticesemi.com/legal.
All other brand or product names are trademarks or registered trademarks of their respective holders. The specifications and information herein are subject to change without notice.

8.2.4. SerDes Clock Architecture

Figure 8.2 shows the clocking structure inside a DCU. There is one Aux channel in each DCU. There are two Tx/Rx channels. Various control bits for the different blocks are shown. These could be dual-based control register bits or channel-based control register bits. In some cases, it can be channel control port-based. Some are a combination of both register and control ports. Using both modes enables dynamic control of certain functional properties.

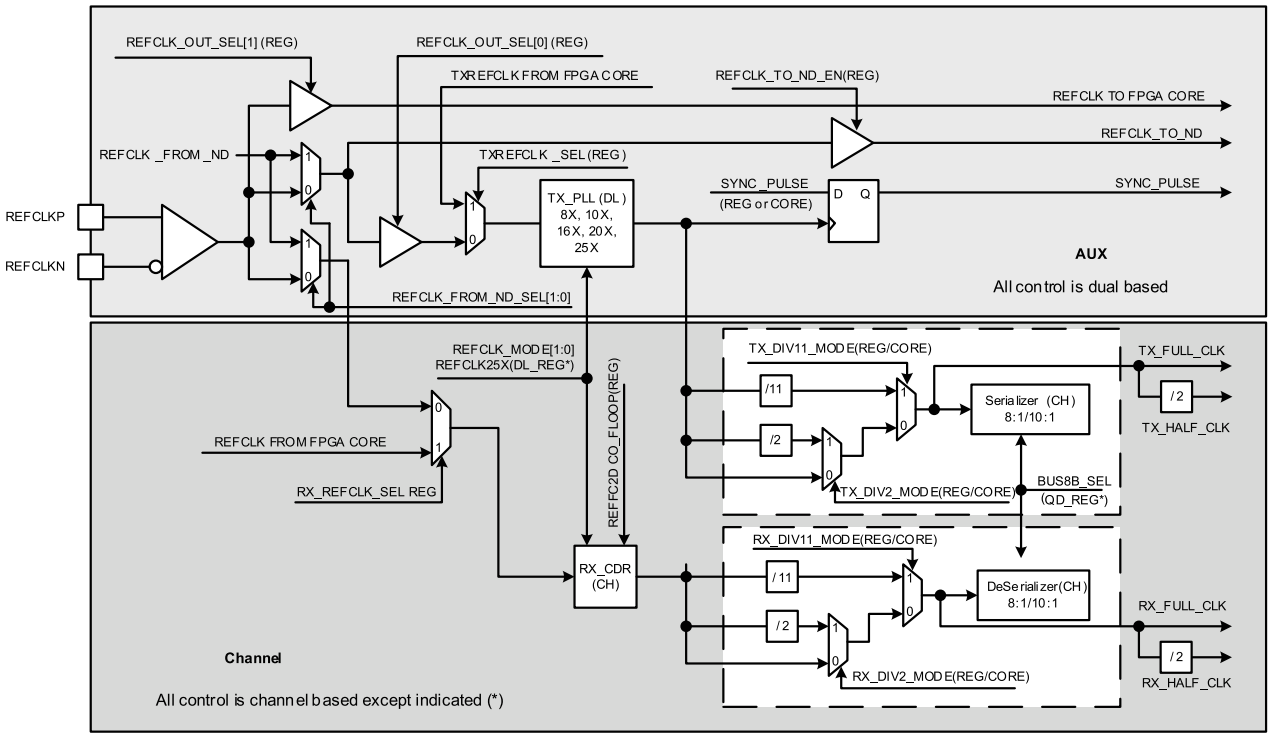

Figure 8.2. SerDes Clock Architecture

The important components of the LFE5UM/LFE5UM5G SerDes clocking architecture include:

- Per Rx and Tx divider (DIV) modes – DIV1, DIV2, DIV11. Suitable for dynamic rate switching.
- REFCLK sharing between DCUs – REFCLK input from DCU0 can be shared by DCU1. Used in x4 link application.
- Multi-channel transmit synchronization using the tx_sync_dual_c signal from the FPGA.

8.2.5. Rate Modes

The TX in each channel can be independently programmed to run at either FULL_RATE, HALF_RATE (DIV2), or DIV11 mode.

The RX can also use a separate reference clock per channel, allowing the transmitter and receiver to run at completely different rates.

It is important to note that the PLL VCO is left untouched, supporting the highest rate for that protocol. All divided rates required by that protocol are supported by programming the divider mux selects. This enables very quick data rate change over since the PLL does not need to be reprogrammed. This is valuable in many applications.

It should be noted when Rx DIV selection is changed dynamically from the core, the Rx of the channels should be reset. The DIV is inside the CDR lock loop, and a change of the value requires the loop to be re-locked again.

The TX PLL and the two CDR PLLs generally run at the same frequency, which is a multiple of the reference clock frequency. Table 8.1 illustrates the various clock rate modes possible. The bit clock indicated is a multiple of the reference clock frequency.

©2014-2023 Lattice Semiconductor Corp. All Lattice trademarks, registered trademarks, patents, and disclaimers are as listed at www.latticesemi.com/legal.
All other brand or product names are trademarks or registered trademarks of their respective holders. The specifications and information herein are subject to change without notice.

Table 8.1. TXPLL and RX CDRPLL Supported Modes

Reference Clock Mode	refclk_mode(Dual)	Bus_Width	Bit Clock(Full)	Bit Clock (div2, div11)
20x	0	10	Refclk x 20	Refclk x 10
16x	0	8	Refclk x 16	Refclk x 8
10x	1	10	Refclk x 10	Refclk x 5
8x	1	8	Refclk x 8	Refclk x 4
25x	—	8	Refclk x 25	Refclk x 12.5
25x	—	10	Refclk x 25	Refclk x 12.5
20x	0	10	Refclk x 20	Refclk x 20/11[1]

Note:
1. DIV11 mode.

8.3. Reference Clock from FPGA Core

As shown in Figure 8.3, the Tx reference clock can be brought from the FPGA core. In this case, the extra jitter caused by the FPGA resources to route the clock to the SerDes is passed onto the transmit data and may violate Tx jitter specifications on a case-by-case basis. Caution should be used when using an FPGA-originated SerDes Tx reference clock.

The Rx reference clock can also be brought from the FPGA core. Each Rx channel can have an independent RxRefClk signal. The Rx reference clock is used in the channel's CDR to acquire the initial frequency lock, before switching to lock to the data. High jitter on RxRefClk when brought in from FPGA can cause difficulty for Rx to obtain initial frequency lock. It can also cause the Rx channel RLOL (Rx Loss Of Lock) signal to go H because the Loss-of-Lock detection circuit compares the recovered clock with the RxRefClk.

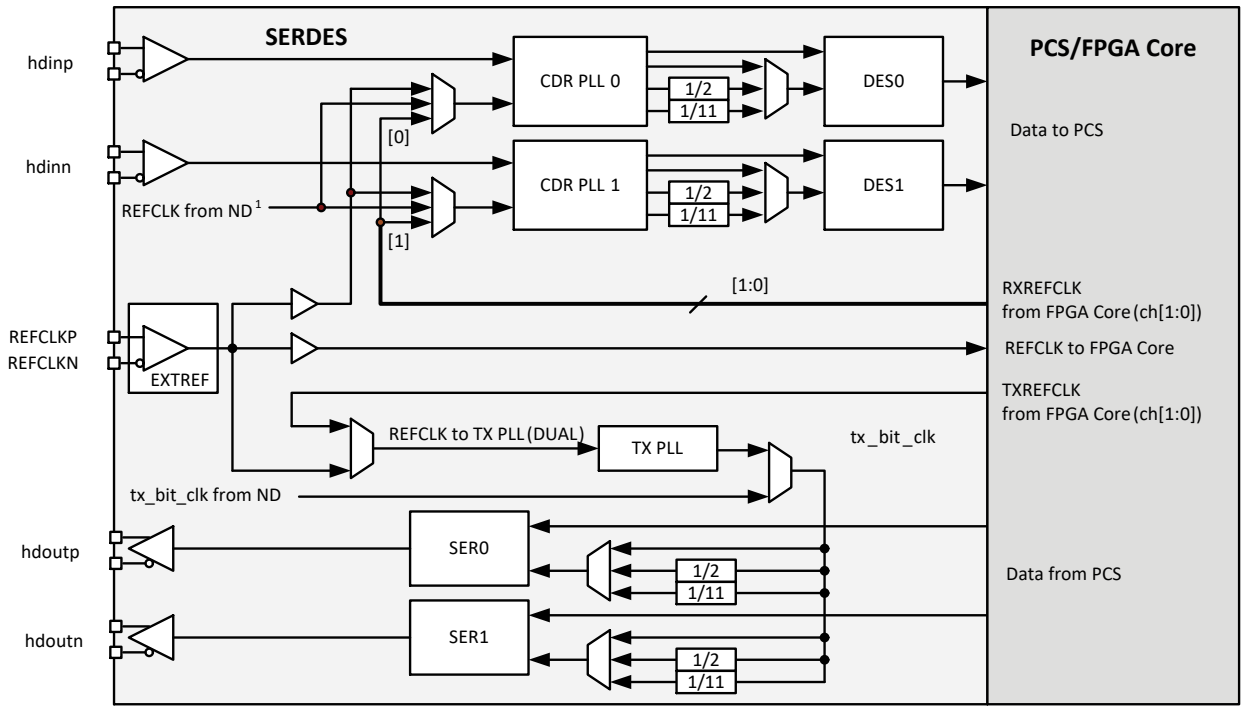

Figure 8.3. Reference Clock Block Diagram

8.3.1. Full Data, Div 2 and Div 11 Data Rates

Each Tx Serializer and Rx Deserializer can be split into full data rate and div2 rate or div11 rate depending on the protocol, allowing for different data rates in each direction and each channel. Refer to Figure 8.3 for more information.

©2014-2023 Lattice Semiconductor Corp. All Lattice trademarks, registered trademarks, patents, and disclaimers are as listed at www.latticesemi.com/legal.
All other brand or product names are trademarks or registered trademarks of their respective holders. The specifications and information herein are subject to change without notice.

8.4. Reference Clock Sources

8.4.1. refclkp, refclkn

Dedicated LVDS input. This clock source is the preferred choice unless different clock sources for RX and TX are used. The input can interface to different electrical standards, such as CML, LVDS, or LVPECL.

8.4.2. FPGA txrefclk, rxrefclk

Reference clock from FPGA logic. This clock signal can be routed from FPGA I/O pins, or FPGA sysCLOCK PLL. In either case, the PCLK clock tree should be used to route the clock to minimize FPGA core noise coupling. When the clock is routed from the pin, the shared PCLK pins should be used to directly connect the pin to the PCLK clock tree. The clock input on the pin can be LVDS or single-ended.

When an FPGA PLL is used as the reference clock, the reference clock to the PLL should be assigned to a dedicated PLL input pad. The FPGA PLL output jitter may not meet system specifications at higher data rates. The use of an FPGA PLL is not recommended in jitter-sensitive applications.

8.5. Clock Distribution in Complementary DCUs

Figure 8.4 shows the clock distribution for two DCU devices. When the x4 link is used, the LFE5UM/LFE5UM5G SerDes provides sharing of the High-Speed bit clocks between the two DCUs, this minimizes Transmit skew between the channels residing in different DCUs.

Also shown in the diagram is sharing of RefClk. This sharing of RefClk allows the Rx channels to use the same clock source, without having to route to two different REFCLK pins externally.

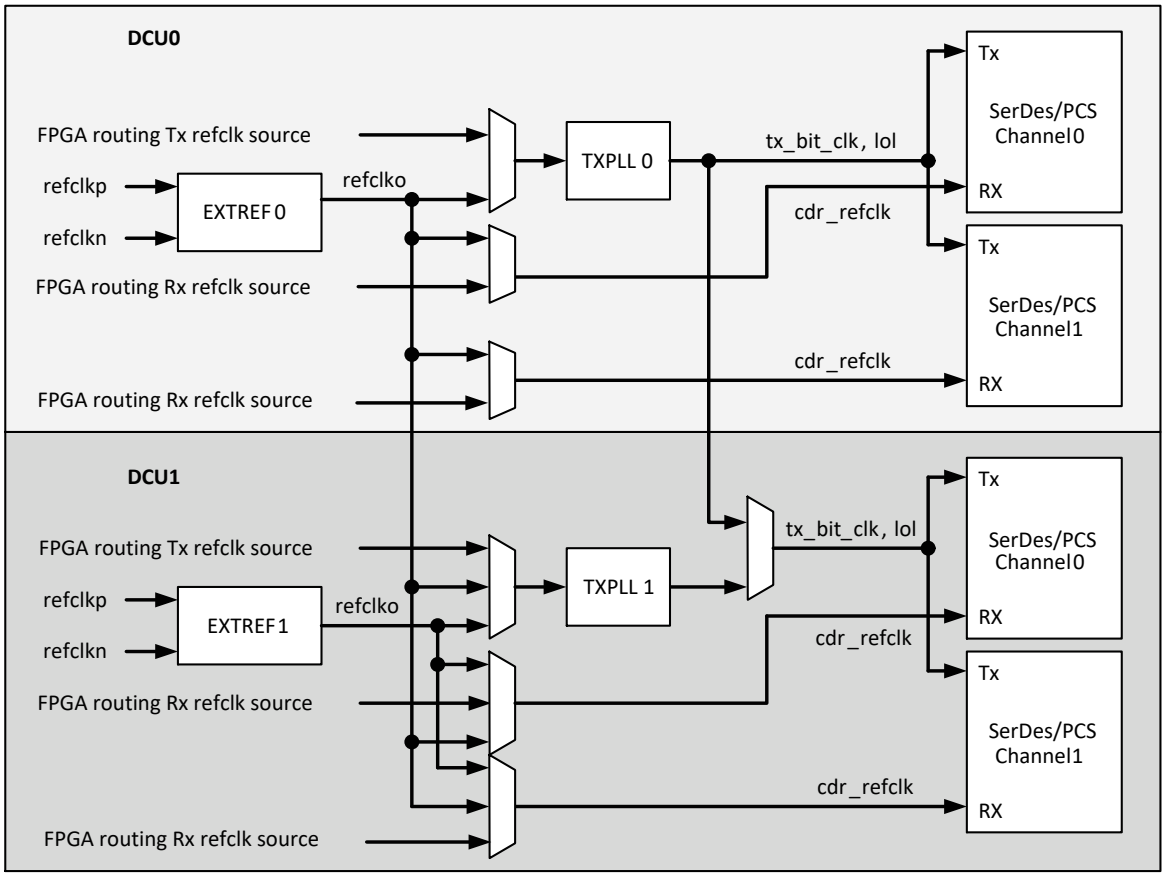

Figure 8.4. Clock Distribution Diagram for a Two Complementary DCU Pair

©2014-2023 Lattice Semiconductor Corp. All Lattice trademarks, registered trademarks, patents, and disclaimers are as listed at www.latticesemi.com/legal.
All other brand or product names are trademarks or registered trademarks of their respective holders. The specifications and information herein are subject to change without notice.

8.6. Spread Spectrum Clocking (SSC) Support

The ports on the two ends of the Link must transmit data at a rate that is within 600 ppm of each other at all times. This is specified to allow a bit-rate clock source with a ±300 ppm tolerance. The minimum clock period cannot be violated. The preferred method is to adjust the spread technique to not allow for modulation above the nominal frequency. The data rate can be modulated from +0% to −0.5% of the nominal data rate frequency, at a modulation rate in the range not exceeding 30 kHz to 33 kHz. Along with the ±300 ppm tolerance limit, both ports require the same bit rate clock when the data is modulated with an SSC.

In PCI Express applications, the root complex is responsible for spreading the reference clock. The endpoint uses the same clock to pass back the spectrum through the Tx. Thus, there is no need for a separate RXREFCLK. The predominant application is an add-in card. Add-in cards are not required to use the REFCLK from the connector but must receive and transmit with the same SSC as the PCI Express connector REFCLK.

While the LFE5UM/LFE5UM5G architecture allows the mixing of a PCI Express channel and a Gigabit Ethernet, Serial RapidIO, or SGMII channel within the same dual, using a PCI Express SSC as the transmit reference clock causes a violation of the Gigabit Ethernet, Serial RapidIO, and SGMII transmit jitter specifications.

8.7. Loss of Signal

Each channel contains a Loss of Signal (LOS) detector circuit at receiver input as shown in Figure 8.5. LOS detector picks up the data signal from channel receiver input and compares its amplitude with a threshold voltage. If the input signal amplitude is lower than the threshold voltage, the LOS detector issues a loss of signal output.

Detected LOS indicates that the amplitude of the input signal is too low. In that case receiver CDR may not be able to recover data from the incoming signal. It is a good indication of any error in the Channel link.

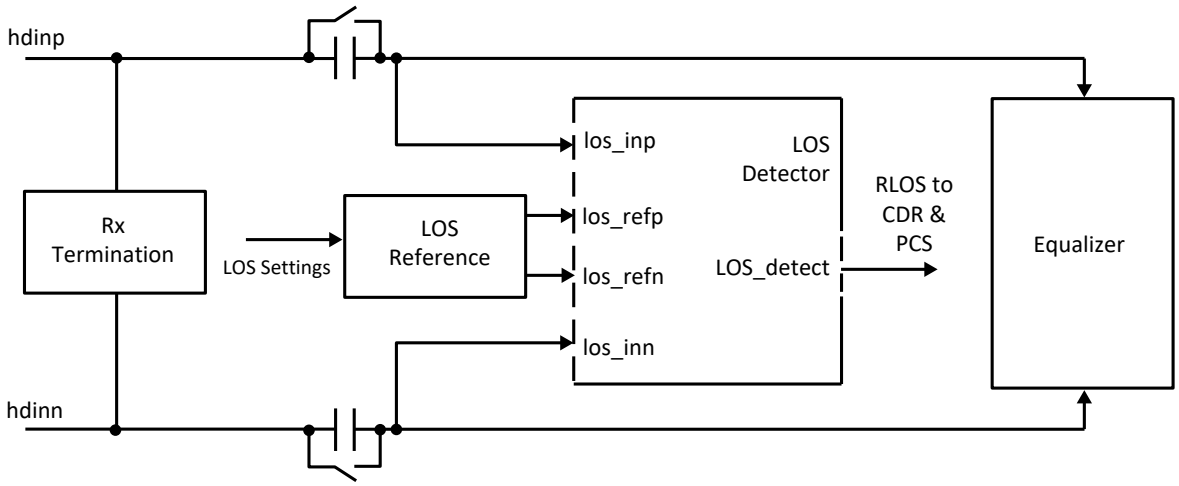

Figure 8.5. Loss of Signal Detector connection to Receiver Inputs

LOS detection is affected by data rate, data pattern, and channel degradation. LOS block shares the signal in the signal path to the Equalizer.

Table 8.2. Response Time for Loss of Signal Detector

Description	Min	Typ	Max	Unit
Time to detect that signal is lost (rx_los_low 0 to 1)	—	8	10	ns
Time to detect that signal is present (rx_los_low 1 to 0)	—	8	10	ns

©2014-2023 Lattice Semiconductor Corp. All Lattice trademarks, registered trademarks, patents, and disclaimers are as listed at www.latticesemi.com/legal.
All other brand or product names are trademarks or registered trademarks of their respective holders. The specifications and information herein are subject to change without notice.

8.8. Loss of Lock

Both the transmit PLL and the individual channel CDRs have digital counter-based, loss-of-lock detectors.

If the transmit PLL loses the lock, the loss-of-lock for the PLL is asserted and remains asserted until the PLL reacquires the lock. When the PLL loses a lock, it is likely to be caused by a reference clock problem.

If a CDR loses lock, the loss-of-lock for that channel is asserted, and locking to the reference clock retrains the DCO in the CDR. When the DCO re-training is achieved, loss-of-lock for that channel is de-asserted and the CDR is switched back over to lock to the incoming data. The CDR either remains locked to the data or goes back out of lock again in which case the re-training cycle repeats. For detailed information on CDR loss-of-lock, see the SerDes/PCS Reset section.

Table 8.3. Response Time for Loss-of-Lock Detector

Description	Min	Typ	Max	Unit
Time to detect that loop is unlocked (tx_pll_lol, rx_cdr_lol goes from 0 to 1)	—	200	500	µs
Time to detect that loop is locked (tx_pll_lol, rx_cdr_lol goes from 1 to 0)	—	200	500	µs

8.9. Tx Lane-to-Lane Skew

Most multi-channel protocol standards require Tx lane-to-lane skew is within a certain specification. A control signal in the Transmitter (that can be controlled either by a register bit or by a FPGA signal), tx_sync_dual_c, resets all the active Tx channels to start serialization with bit 0.

8.10. Transmit Data

The PCS dual transmits data path consists of an 8b10b encoder and serializer per channel.

8.11. 8b10b Encoder

This module implements an 8b10b encoder as described within the IEEE 802.3ae-2002 1000BASE-X specification. The encoder performs the 8-bit to 10-bit code conversion as described in the specification, along with maintaining the running disparity rules as specified. The 8b10b encoder can be bypassed on a per-channel basis by setting the attribute CHx_8B10B to “BYPASS” where x is the channel number.

8.12. Serializer

The 8b10b encoded data undergoes parallel-to-serial conversion and is transmitted off-chip through the embedded SerDes.

8.13. Receive Data

The PCS dual receive data path consists of the following sub-blocks per channel: Deserializer, Word Aligner, 8b10b Decoder, Optional Link State Machine, and Optional Receive Clock Tolerance Compensation (CTC) FIFO.

8.14. Deserializer

Data is brought on-chip to the embedded SerDes where it goes from serial to parallel.

©2014-2023 Lattice Semiconductor Corp. All Lattice trademarks, registered trademarks, patents, and disclaimers are as listed at www.latticesemi.com/legal.
All other brand or product names are trademarks or registered trademarks of their respective holders. The specifications and information herein are subject to change without notice.

8.15. Word Alignment (Byte Boundary Detect)

This module performs the comma code word detection and alignment operation. The comma character is used by the receive logic to perform 10-bit word alignment on the incoming data stream. The comma description can be found in section 36.2.4.9 of the 802.3.2002 1000BASE-X specification.

Some programmable options are supported within the word alignment module:

- Word alignment control from either embedded Link State Machine (LSM) or FPGA control. Supported in 8-bit SerDes Only, 10-bit SerDes Only and SDI modes, in addition to 8b10b packet mode.
- Ability to set two programmable word alignment characters (typically one for positive and one for negative disparity) and a programmable per-bit mask register for alignment comparison. The alignment characters and the mask register are set on a per DCU basis. For many protocols, the word alignment characters can be set to *XX00000011* (jhgfiedcba bits for positive running disparity comma character matching code groups K28.1, K28.5, and K28.7) and *XX01111100* (jhgfiedcba bits for negative running disparity comma character matching code groups K28.1, K28.5, and K28.7). However, you can define any 10-bit pattern.
- The first alignment character is defined by the 10-bit value assigned to the attribute COMMA_A. This value applies to all channels in a PCS dual.
- The second alignment character is defined by the 10-bit value assigned to the attribute COMMA_B. This value applies to all channels in a PCS dual.
- The mask register defines which word alignment bits to compare (a *1* in a bit of the mask register means to check the corresponding bit in the word alignment character register). The mask registers are defined by the 10-bit value assigned to the attribute COMMA_M. This value applies to all channels in a PCS dual. When the attribute CHx_WA_BYPASS (word alignment) is set to *ENABLED* and CHx_LSM_DISABLE (Internal Link State Machine) is set to *ENABLED*, one of the protocol-based Link State Machines controls word alignment. For more information on the operation of the protocol-based Link State Machines, see the Protocol-Specific Link State Machine section below.

8.16. 8b10b Decoder

The 8b10b decoder implements an 8b10b decoder operation as described by the IEEE 802.3-2002 specification. The decoder performs the 10-bit to 8-bit code conversion along with verifying the running disparity. When a code violation is detected, the received data, rxdata, is set to 0xEE with rx_k set to ‘1’.

8.17. External Link State Machine Option

When the attribute CHx_LSM_DISABLE (Internal Link State Machine) is set to DISABLED, and CHx_WA_BYPASS (word alignment) is set to ENABLED, the control signal word_align_en_ch[1:0]_c is used to enable the word aligner. This signal should be sourced from a FPGA external Link State Machine implemented in the FPGA fabric. When the word_align_en_ch[1:0]_c is high, the word aligner locks alignment and stays locked. It stops comparing incoming data to the user-defined word alignment characters and maintains current alignment on the first successful comparison to either COMMA_A or COMMA_B. If re-alignment is required, pulse the word_align_en_ch[1:0]_c low to high. The word aligner re-locks on the next match to one of the user-defined word alignment characters. If desired, word_align_en_ch[1:0]_c can be controlled by a Link State Machine implemented externally to the PCS dual to allow a change in word alignment only under specific conditions.

When a Link State Machine is selected and enabled for a particular channel, that channel’s lsm_status_ch[1:0]_s status signal goes high on successful link synchronization.

©2014-2023 Lattice Semiconductor Corp. All Lattice trademarks, registered trademarks, patents, and disclaimers are as listed at www.latticesemi.com/legal.
All other brand or product names are trademarks or registered trademarks of their respective holders. The specifications and information herein are subject to change without notice.

8.18. Idle Insert for Gigabit Ethernet Mode

This is required for Clock Compensation and Auto-Negotiation (the latter is done in the FPGA logic).

This module automatically inserts /I2/ symbols into the receive data stream during auto-negotiation. Whilst auto-negotiating, the link partner continuously transmits /C1/ and /C2/ ordered sets. The clock-compensator does not delete these ordered sets as it is configured to only insert/delete /I2/ ordered sets. To prevent overruns and underruns in the clock compensator, /I2/ ordered sets must be periodically inserted to provide insertion/deletion opportunities for the clock compensator.

Whilst performing auto-negotiation, this module inserts a sequence of 8 /I2/ ordered sets (2 bytes each) every 2048 clock cycles. As this module is after the 8b10b decoder, this operation does not introduce any running disparity errors. These /I2/ ordered sets are not passed on to the FPGA receive interface as the GMII interface is driven to IDLE by the Rx state machine during auto-negotiation. Once auto-negotiation is complete, /I2/ insertion is disabled to prevent any corruption of the received data.

Note that this state machine is active only during auto-negotiation. The auto-negotiation state machine and the GigE receive state machines are implemented in the soft logic. This state machine depends on the signal *xmit* from the auto-negotiation state machine. This signal is provided on the TX data bus. Even though this signal is relatively static (especially after auto-negotiation is done) it is currently decided to put this in TX data bus. It provides a signal – *rx_even_out*. This is sent out on the receive data bus to the FPGA logic.

8.19. Clock Tolerance Compensation

The Clock Tolerance Compensation (CTC) module performs clock rate adjustment between the recovered receive clocks and the locked reference clock. Clock compensation is performed by inserting or deleting bytes at predefined positions, without causing loss of packet data. A 16-byte CTC FIFO is used to transfer data between the two clock domains and accommodates clock differences of up to the specified ppm tolerance for the LFE5UM/LFE5UM5G SerDes. Refer to the DC and Switching Characteristics section of ECP5 and ECP5-5G Family Data Sheet (FPGA-DS-02012).

A channel has the Clock Tolerance Compensation block enabled when that channel's attribute CHx_CTC_BYPASS is set to *ENABLED*. The CTC is bypassed when that channel's attribute CHx_CTC is set to *DISABLED*. The following diagrams show 2- and 4-byte deletion.

A diagram illustrating 2-byte deletion is shown in Figure 8.6.

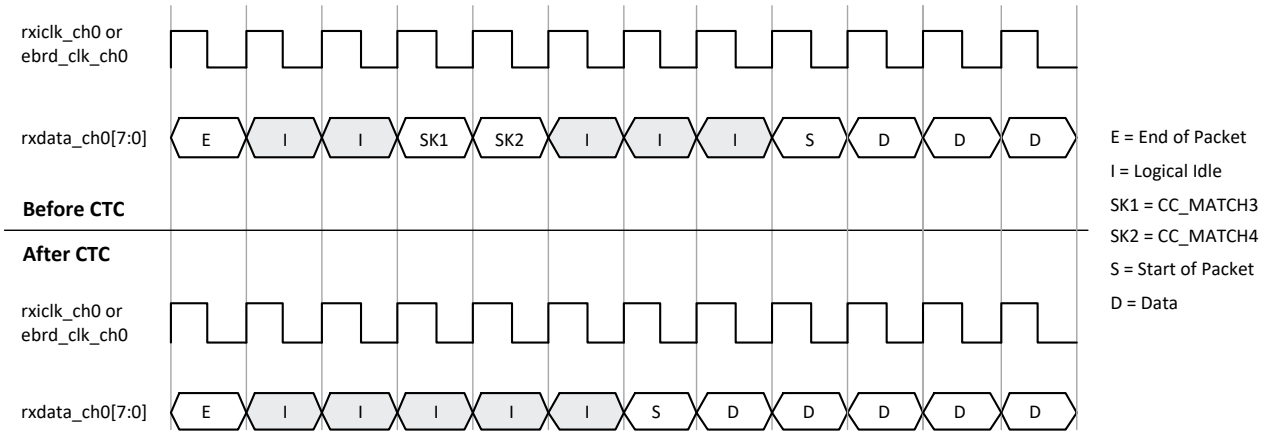

Figure 8.6. Clock Tolerance Compensation 2-Byte Deletion Example

A diagram illustrating 2-byte insertion is shown in Figure 8.7.

©2014-2023 Lattice Semiconductor Corp. All Lattice trademarks, registered trademarks, patents, and disclaimers are as listed at www.latticesemi.com/legal.
All other brand or product names are trademarks or registered trademarks of their respective holders. The specifications and information herein are subject to change without notice.

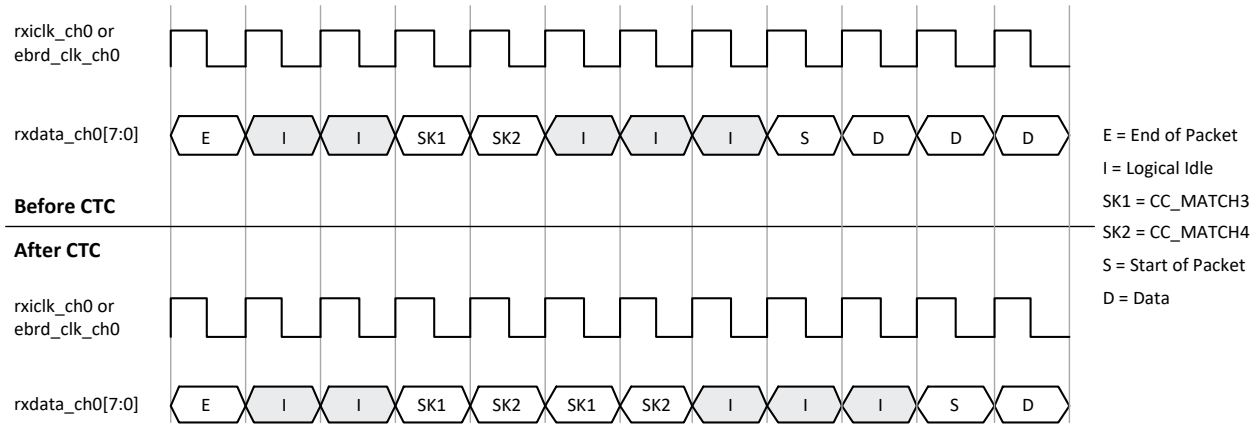

Figure 8.7. Clock Tolerance Compensation 2-Byte Insertion Example

A diagram illustrating 4-byte deletion is shown in Figure 8.8.

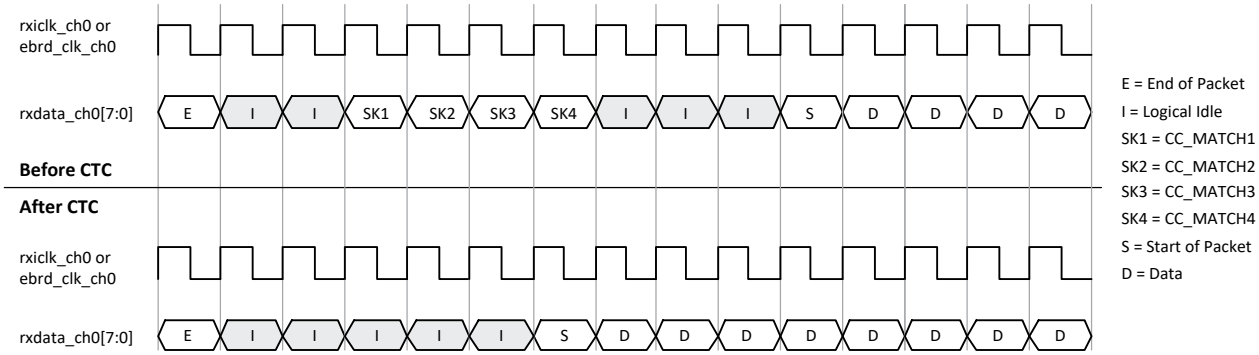

Figure 8.8. Clock Tolerance Compensation 4-Byte Deletion Example

A diagram illustrating 4-byte insertion is shown in Figure 8.9.

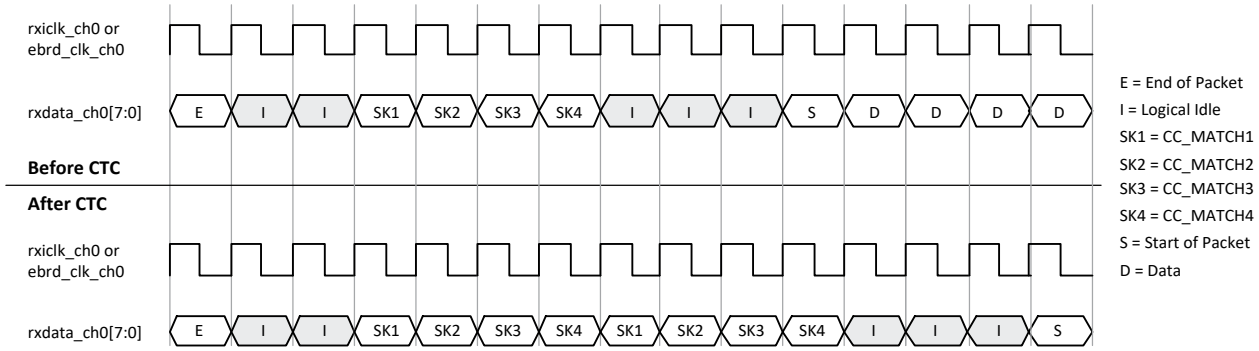

Figure 8.9. Clock Tolerance Compensation 4-Byte Insertion Example

©2014-2023 Lattice Semiconductor Corp. All Lattice trademarks, registered trademarks, patents, and disclaimers are as listed at www.latticesemi.com/legal.
All other brand or product names are trademarks or registered trademarks of their respective holders. The specifications and information herein are subject to change without notice.

When the CTC is used, the following settings for clock compensation must be set, as appropriate, for the intended application:

- Set the insertion/deletion pattern length using the CC_MATCH_MODE attribute. This sets the number of skip bytes the CTC compares to before performing an insertion or deletion. Values for CC_MATCH_MODE are “2” (2-byte insertion/deletion) and “4” (4-byte insertion/deletion). The minimum interpacket gap must also be set as appropriate for the targeted application. The interpacket gap is set by assigning values to the attribute MIN_IPG_CNT. Allowed values for MIN_IPG_CNT are “0”, “1”, “2”, and “3”. The minimum allowed interpacket gap after skip character deletion is performed based on these attribute settings is described in Table 8.4.
- The skip byte or ordered set must be set corresponding to the CC_MATCH_MODE chosen. For 4-byte insertion/deletion (CC_MATCH_MODE = “4”), the first byte must be assigned to attribute CC_MATCH1, the second byte must be assigned to attribute CC_MATCH2, the third byte must be assigned to attribute CC_MATCH3, and the fourth byte must be assigned to attribute CC_MATCH4. Values assigned are 10-bit binary values.

  For example:

  If a 4-byte skip ordered set is /K28.5/D21.4/D21.5/D21.5, then “CC_MATCH1” should be “0110111100”, “CC_MATCH2” = “0010010101”, “CC_MATCH3” = “0010110101” and “CC_MATCH4” = “0010110101”.

  For a 2-byte insertion/deletion (CC_MATCH_MODE = “2”), the first byte must be assigned to attribute CC_MATCH3, and the second byte must be assigned to attribute CC_MATCH4.
- The clock compensation FIFO high water and low water marks must be set to appropriate values for the targeted protocol. Values can range from 0 to 15 and the high water mark must be set to a higher value than the low water mark (they should not be set to equal values). The high watermark is set by assigning a value to the attribute HIGH_MARK. Allowed values for HIGH_MARK are hex values ranging from “0” to “F”. The low watermark is set by assigning a value to the attribute LOW_MARK. Allowed values for LOW_MARK are hex values ranging from “0” to “F”.
- Clock compensation FIFO overrun can be monitored on a per-channel basis on the PCS/FPGA interface port labeled cc_overrun_ch(0-3) if “Error Status Ports” is selected when generating the PCS block with the module generator.
- Clock compensation FIFO underrun can be monitored on a per-channel basis on the PCS/FPGA interface port labeled cc_underrun_ch(0-3) if “Error Status Ports” is selected when generating the PCS block with the module generator.

8.20. Calculating Minimum Interpacket Gap

Table 8.4 shows the relationship between the user-defined values for the interpacket gap (defined by the MIN_IPG_CNT attribute) and the guaranteed minimum number of bytes between packets after a skip character deletion from the PCS. The table shows the interpacket gap as a multiplier number. The minimum number of bytes between packets is equal to the number of bytes per insertion/deletion times the multiplier number shown in the table. For example, if the number of bytes per insertion/deletion is 4 (CC_MATCH_MODE is set to “4”), and the minimum interpacket gap attribute MIN_IPG_CNT is set to “2”, then the minimum interpacket gap is equal to 4 (CC_MATCH_MODE = “4”) times 3 (Table 8.4 with MIN_IPG_CNT = “2”) or 12 bytes. The PCS does not perform a skip character deletion until the minimum number of interpacket bytes have passed through the CTC.

Table 8.4. Minimum Interpacket Gap Multiplier

MIN_IPG_CNT	Insertion/Deletion Multiplier Factor
0	1X
1	2X
2	3X
3	4X

©2014-2023 Lattice Semiconductor Corp. All Lattice trademarks, registered trademarks, patents, and disclaimers are as listed at www.latticesemi.com/legal.
All other brand or product names are trademarks or registered trademarks of their respective holders. The specifications and information herein are subject to change without notice.

8.21. Protocol Modes

8.21.1. Generic 8b10b Mode

The Generic 8b10b mode of the SerDes/PCS block is intended for applications requiring 8b10b encoding/decoding without the need for additional protocol-specific data manipulation. The LFE5UM/LFE5UM5G SerDes/PCS block can support Generic 8b10b applications up to 3.2 Gb/s per channel in ECP5, and 5 Gb/s per channel in ECP5-5G. In Generic 8b10b mode, the word aligner can be controlled from the embedded PCS Link State Machine (LSM).

When the embedded Link State Machine is selected and enabled, the lsm_status_ch[3:0]_s status signal goes high on successful link synchronization.

To achieve link synchronization in this mode, the following conditions need to be satisfied on the 8b10b patterns received at the SerDes channel's receiver input (hdinp_ch[0-3]/hdinn_ch[0-3]):

- Periodic 8b10b encoded comma characters need to be present in the serial data. Periodicity is required to allow the LSM to re-synchronize to commas on the loss of sync. The comma characters should correspond to the "Specific Comma" value shown below. For example, when the Specific Comma is set to K28P157, the comma value on the serial link can be the 8b10b encoded version of any of K28.1 (k=1, Data=0x3C), K28.5 (k=1, Data=0xBC), or K28.7 (k=1, Data=0xFC). Note though that K28.5 is most commonly used.
- A comma character has to be followed by a data character.
- Two comma characters have to be an even number of word clock cycles apart Additional information.
- It takes roughly four good comma/data pairs for the LSM to reach link synchronization.
- It takes four consecutive errors (illegal 8b10b encoded characters, code violations, disparity errors, an uneven number of clock cycles between commas) to cause the LSM to unlock.
- A CDR loss of lock condition causes the LSM to unlock by virtue of the many code violation and disparity errors that result.
- When the internal reset sequence state machine is used, a CDR loss of lock (rx_cdr_lol_ch[3:0]_s) or a loss of signal (rx_los_low_ch[3:0]_s) condition causes the Rx reset sequence state machine to reset the SerDes and cause the LSM to unlock.

The two examples below illustrate the difference between a valid and an invalid even clock cycle boundary between COMMA occurrences (C = comma, D = data).

Valid (even) comma boundary:

Word Clock Cycle	0	1	2	3	4	5	6	7	8	9	10	11
Character	C	D	C	D	C	D	D	D	D	D	C	D

Inavalid (odd) comma boundary:

Word Clock Cycle	0	1	2	3	4	5	6	7	8	9	10	11	12
Character	C	D	C	D	C	D	D	D	D	C	D	C	D

In the invalid (odd) comma boundary case above, the comma occurrences on cycles 9 and 11 are invalid since they do not fall on an even boundary apart from the previous comma.

Alternatively, the LSM can be disabled, and the word aligner is controlled from the fabric word_align_en_ch[3:0]_c input pin.

Transmit Path

- Serializer
- 8b10b encoder

Receive Path

- Deserializer
- Word alignment to a user-defined word alignment character or characters from embedded GbE Link State Machine
- 8b10b decoding
- Clock Tolerance Compensation (optional)

©2014-2023 Lattice Semiconductor Corp. All Lattice trademarks, registered trademarks, patents, and disclaimers are as listed at www.latticesemi.com/legal.
All other brand or product names are trademarks or registered trademarks of their respective holders. The specifications and information herein are subject to change without notice.

8.21.2. Gigabit Ethernet and SGMII Modes

The Gigabit Ethernet mode of the LFE5UM/LFE5UM5G SerDes/PCS block supports full compatibility, from the Serial I/O to the GMII/SGMII interface of the IEEE 802.3-2002 1000 BASE-X Gigabit Ethernet standard.

Transmit Path

- Serializer
- 8b10b encoding

Receive Path

- Deserializer
- Word alignment based on IEEE 802.3-2002 1000 BASE-X defined alignment characters.
- 8b10b decoding
- The Gigabit Ethernet Link State Machine is compliant with Figure X (Synchronization State Machine, 1000BASE-X) of IEEE 802.3-2002 with one exception. Figure X requires that four consecutive good code groups are received for the LSM to transition from one SYNC_ACQUIRED_{N} (N=2,3,4) to SYNC_ACQUIRED_{N−1}. Instead, the actual LSM implementation requires five consecutive good code groups to make the transition.
- Gigabit Ethernet Carrier Detection: Section 36.2.5.1.4 of IEEE 802.3-2002 (1000BASE-X) defines the carrier_detect function. In Gigabit Ethernet mode, this feature is not included in the PCS and a carrier_detect signal is not provided to the FPGA fabric.
- Clock Tolerance Compensation logic is capable of accommodating clock domain differences.

8.21.2.1. Gigabit Ethernet (1000BASE-X) Idle Insert

This is required for Clock Compensation and Auto-negotiation. Auto-negotiation is done in FPGA logic. The Lattice Gigabit Ethernet PCS IP core provides the auto-negotiation discussed below.

Idle pattern insertion is required for clock compensation and auto-negotiation. Auto-negotiation is done in FPGA logic. This module automatically inserts /I2/ symbols into the receive data stream during auto-negotiation. While auto-negotiating, the link partner continuously transmits /C1/ and /C2/ ordered sets. The clock-compensator does not delete these ordered sets as it is configured to only insert/delete /I2/ ordered sets. To prevent overruns and underruns in the clock compensator, /I2/ ordered sets must be periodically inserted to provide insertion/deletion opportunities for the clock compensator.

While performing auto-negotiation, this module inserts a sequence of eight /I2/ ordered sets (2 bytes each) every 2048 clock cycles. As this module is after the 8b10b decoder, this operation does not introduce any running disparity errors. These /I2/ ordered sets are not passed on to the FPGA receive interface as the GMII interface is driven to IDLE by the RX state machine during auto-negotiation. Once auto-negotiation is complete, /I2/ insertion is disabled to prevent any corruption of the received data.

Note that this state machine is active only during auto-negotiation. The auto-negotiation state machine and the GbE receive state machines are implemented in the soft logic. This state machine depends on the signal xmit_ch[1:0] from the auto-negotiation state machine. This signal is provided on the Tx data bus. Though this signal is relatively static (especially after auto-negotiation) it is included in the Tx data bus.

Table 8.5. GbE IDLE State Machine Control and Status Signals

Module Signal	Direction	Description
xmit_ch[1:0]	In	From FPGA logic Auto-Negotiation State Machine

©2014-2023 Lattice Semiconductor Corp. All Lattice trademarks, registered trademarks, patents, and disclaimers are as listed at www.latticesemi.com/legal.
All other brand or product names are trademarks or registered trademarks of their respective holders. The specifications and information herein are subject to change without notice.

8.21.3. Gigabit Ethernet Idle Insert and correct_disp_ch[1:0] Signals

The correct_disp_ch[1:0] signal is used on the transmit side of the PCS to ensure that an interpacket gap begins in the negative disparity state. Note that at the end of an Ethernet frame, the current disparity state of the transmitter can be either positive or negative, depending on the size and data c.ontent of the Ethernet frame.

However, from the FPGA soft-logic side of the PCS, the current disparity state of the PCS transmitter is unknown. This is where the correct_disp_ch[1:0] signal comes into play. If the correct_disp_ch[1:0] signal is asserted for one clock cycle on entering an interpacket gap, it forces the PCS transmitter to insert an IDLE1 ordered set into the transmit data stream if the current disparity is positive. However, if the current disparity is negative, then no change is made to the transmitted data stream.

From the FPGA soft-logic side of the PCS, the interpacket gap is typically characterized by the continuous transmission of the IDLE2 ordered set which is as follows: tx_k_ch=1, txdata= 0xBC tx_k_ch=0, txdata=0x50.

Note that in the PCS channel, IDLE2s mean that the current disparity is to be preserved. IDLE1s mean that the current disparity state should be flipped. Therefore, it is possible to ensure that the interpacket gap begins in a negative disparity state. If the disparity state before the interpacket gap is negative, then a continuous stream of IDLE2s is transmitted during the interpacket gap. If the disparity state before the interpacket gap is positive, then a single IDLE1 is transmitted followed by a continuous stream of IDLE2s.

In the FPGA soft-logic side of the PCS, the interpacket gap is always driven with IDLE2s into the PCS. The correct_disp_ch[3:0] signal is asserted for one clock cycle, k_cntrl=0, data=0x50 when the interpacket gap first begins. If necessary, the PCS converts this IDLE2 into an IDLE1. For the remainder of the interpacket gap, IDLE2s should be driven into the PCS and the correct_disparity_chx signal should remain deasserted.

For example, if a continuous stream of 512 bytes of Ethernet frames and 512 bytes of /I/ are sent, it can be observed that:

- During the first interpacket gap, all negative disparity /I2/s are seen (K28.5(-) D16.2(+))
- During the next interpacket gap, the period begins with positive disparity /I1/ (K28.5 (+), D5.6 (+/− are the same)), then all remaining ordered sets are negative disparity /I2/s
- During the next interpacket gap, all negative disparity /I2/s are seen
- During the next interpacket gap, the period begins with positive disparity /I1/ (K28.5 (+), D5.6 (+/− are the same)), then all remaining ordered sets are negative disparity /I2/s

Some programmable options are supported within the encoder module. These are:

- Ability to force negative or positive disparity on a per-word basis
- Ability to input data directly from the FIFO Bridge - external multiplexer
- Ability to replace code words dependent on running disparity (100BASE-X and FC)
- Software register controlled bypass mode

8.22. XAUI Mode

With the Lattice XAUI IP Core, the XAUI mode of the SerDes/PCS block supports full compatibility from Serial I/O to the XGMII interface of the IEEE 802.3-2002 XAUI standard. XAUI Mode supports 10 Gigabit Ethernet.

Transmit Path

- Serializer
- Transmit State Machine which performs translation of XGMII idles to proper ||A||, ||K||, ||R|| characters according to the IEEE 802.3ae-2002 specification
- 8b10b Encoding

©2014-2023 Lattice Semiconductor Corp. All Lattice trademarks, registered trademarks, patents, and disclaimers are as listed at www.latticesemi.com/legal.
All other brand or product names are trademarks or registered trademarks of their respective holders. The specifications and information herein are subject to change without notice.

Receive Path

- Deserializer
- Word alignment based on IEEE 802.3-2002 defined alignment characters.
- 8b10b Decoding
- The XAUI Link State Machine is compliant with Figure 48-7 – PCS synchronization state diagram of IEEE 802.3ae-2002 with one exception. Figure 48-7 requires that four consecutive good code groups be received for the LSM to transition from one SYNC_ACQUIRED_{N} (N=2,3,4) to SYNC_ACQUIRED_{N-1}. Instead, the actual LSM implementation requires five consecutive good code groups to make the transition.
- Clock Tolerance Compensation logic in PCS is disabled in XAUI mode. MCA (Multi-Channel Alignment) and CTC are done in the XAUI IP core.
- x4 multi-channel alignment should be done in FPGA core logic.

8.23. PCI Express Revision 1.1 and 2.0

The PCI Express mode of the SerDes/PCS block supports x1, x2, and x4 PCI Express applications.

Transmit Path

- Serializer
- 8b10b Encoding
- Receiver Detection
- Electrical Idle

Receive Path

- Deserializer
- Word alignment based on the Sync Code
- 8b10b Decoding
- Link Synchronization State Machine functions incorporating operations defined in the PCS Synchronization State Machine (Figure 48-7) of the IEEE 802.3ae-2002 10GBASE-X Specification.
- x2 or x4 PCI Express operation with one or two DCU set to PCI Express mode.
- Clock Tolerance Compensation logic is capable of accommodating clock domain differences.
- x2 or x4 multi-channel alignment should be done in FPGA core logic. Table 8.6 describes the PCI Express mode-specific ports.

Table 8.6. PCI Express Mode Specific Ports

Signal	Direction	Class	Description
pcie_done_ch[1:0]_s	Out	Channel	1 – Far-end receiver detection complete 0 – Far-end receiver detection incomplete
pcie_con_ch[1:0]_s	Out	Channel	Result of far-end receiver detection 1 – Far-end receiver detected 0 – Far-end receiver not detected
pcie_det_en_ch[1:0]_c	In	Channel	FPGA logic (user logic) informs the SerDes block that it requests a PCI Express Receiver Detection operation. 1 – Enable PCI Express Receiver Detect 0 – Normal Operation
pcie_ct_ch[1:0]_c	In	Channel	1 – Request transmitter to do far-end receiver detection 0 – Normal Operation
rxstatus[2:0]	Out	Channel	Per channel PCI Express receives status port. RxStatus is an encoded status of the receive data path. 2-bit wide if in 16-bit bus mode.

©2014-2023 Lattice Semiconductor Corp. All Lattice trademarks, registered trademarks, patents, and disclaimers are as listed at www.latticesemi.com/legal.
All other brand or product names are trademarks or registered trademarks of their respective holders. The specifications and information herein are subject to change without notice.

8.24. PCI Express Termination

At the electrical level, PCI Express utilizes two uni-directional low voltages differential signaling pairs at 2.5 Gb/s (for ECP5 and ECP5-5G devices), or 5 Gb/s (for ECP5-5G devices only) for each lane. Transmit and receive are separate differential pairs, for a total of four data wires per lane. An input receiver with programmable equalization and output transmitters with programmable de-emphasis permits optimization of the link. The PCI Express specification requires that the differential line must be common mode terminated at the receiving end. Each link requires a termination resistor at the far (receiver) end. The nominal resistor values used are 100 Ω. This is accomplished by using the embedded termination features of the CML inputs as shown in Figure 8.10. The specification requires AC coupling capacitors (CTX) on the transmit side of the link. This eliminates potential common-mode bias mismatches between transmit and receive devices. The capacitors must be added external to the Lattice CML outputs.

8.24.1.1. PCI Express L2 State

For the PCI Express L2 state, the rx_pwrup_c signal should not be de-asserted to power-down the Rx channel. The rx_pcs_rst_c signal should be used to hold the channel in reset to save power.

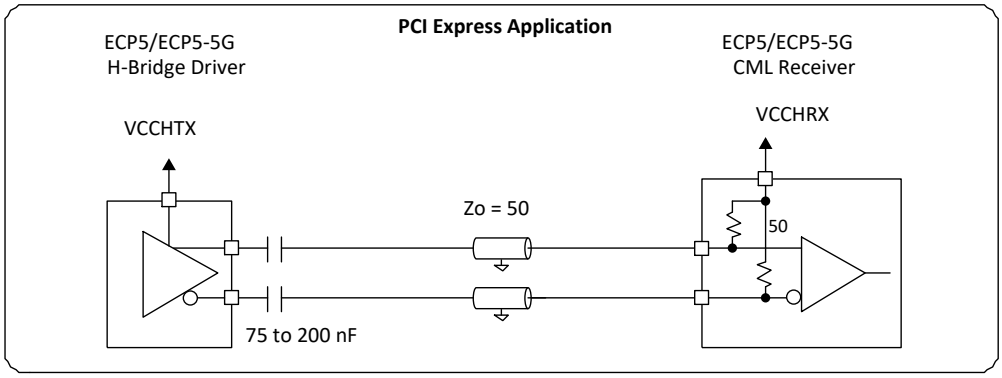

Figure 8.10. PCI Express Interface Diagram

Table 8.7. Differential PCI Express Specifications

Symbol	Parameter	Min	Typ	Max	Unit	Comments	Location
ZTX-DIFF-DC	DC Differential TX Impedance	80	100	120	Ω	TX DC Differential mode low impedance. ZTX-DIFF-DC is the small signal resistance of the transmitter measured at a DC operating point that is equivalent to that established by connecting a 100 Ω resistor from D+ and D− while the TX is driving a static logic one or logic zero.	Internal
ZRX-DIFF-DC	DC Differential Input Impedance	80	100	120	Ω	RX DC Differential mode impedance during all LTSSM states. When transmitting from a Fundamental Reset to Detect (the initial state of the LTSSM), there is a 5 ms transition time before receiver termination values must be met on all unconfigured lanes of a port.	Internal
CTX	AC Coupling Capacitor	75	—	200	nF	All transmitters shall be AC coupled. The AC coupling is required either within the media or within transmitting component itself.	External

©2014-2023 Lattice Semiconductor Corp. All Lattice trademarks, registered trademarks, patents, and disclaimers are as listed at www.latticesemi.com/legal.
All other brand or product names are trademarks or registered trademarks of their respective holders. The specifications and information herein are subject to change without notice.

8.25. PCI Express Electrical Idle Transmission

Electrical Idle is a steady state condition where the transmitter P and N voltages are held constant at the same value (that is the Electrical Idle Differential Peak Output Voltage, VTX-IDLE-DIFFp, is between 0 mV and 20 mV). Electrical Idle is primarily used in power saving and inactive states.

Per the PCI Express base specification, before a transmitter enters Electrical Idle, it must always send the Electrical Idle Ordered Set (EIOS), a K28.5 (COM) followed by three K28.5 (IDL). After sending the last symbol of the Electrical Idle Ordered Set, the transmitter must be in a valid Electrical Idle state as specified by TTX-IDLE-SET-TO-IDLE is less than 20 UI.

To achieve this, the Electrical Idle Enable (tx_idle_chx_c) from the FPGA core logic to the PCS is sent in along with each transmit data. This signal is pipelined similarly all the way to the PCS-SerDes boundary. For all valid data, this signal is LOW. To initiate Electrical Idle, the FPGA logic pulls this signal HIGH on the clock after it transmits the last K28.5 (IDL) symbol. As the signal is pipelined to the PCS-SerDes boundary, the relationship between the transmit data and this signal is exactly the same as on the FPGA-PCS boundary.

14 UI after the rising edge of the Electrical Idle enable signal at the PCS-SerDes boundary the last bit (bit7) of the last K28.3 (IDL) symbol is transmitted. 16 UI (<20 UI) later the transmit differential buffer achieves Electrical Idle state.

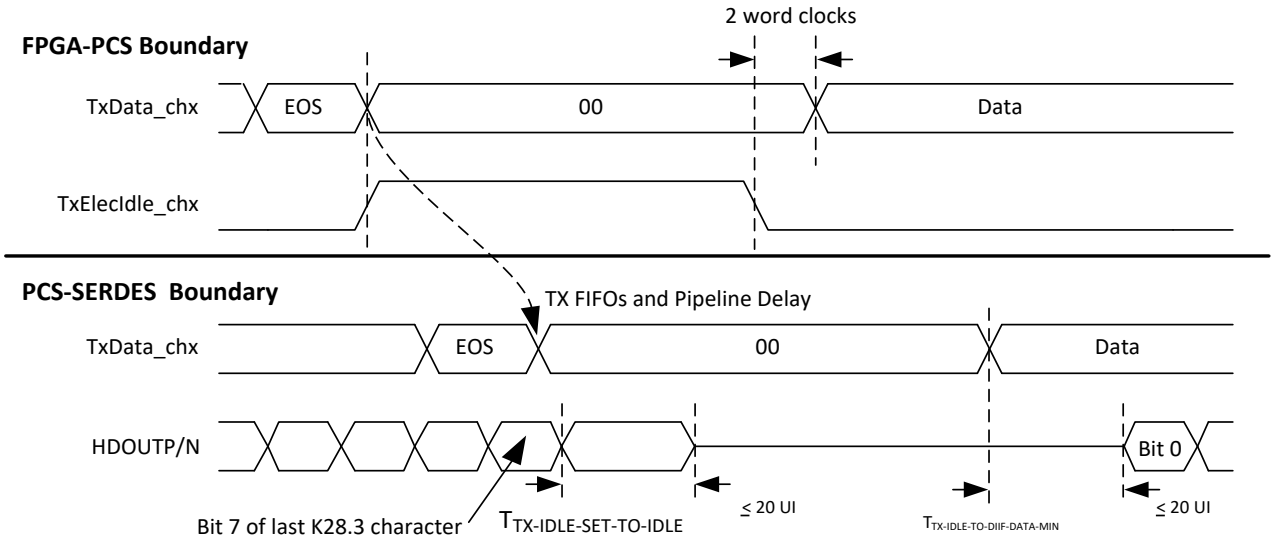

Figure 8.11. Transmit Electrical Idle

As long as the FPGA core logic deems that the transmitter needs to stay in Electrical Idle state it needs to clock in data (preferably all zeros) along with the Electrical Idle Enable (tx_idle_chx_c) signal active (HIGH). The transmitter is required to stay in the Electrical Idle state for a minimum of 50 UI (20 ns) (TTX-IDLE-MIN).

8.26. PCI Express Electrical Idle Detection

Each channel of the DCU has a loss-of-signal detector. The Electrical Idle is detected once two out of the three K28.3 (IDL) symbols in the Electrical Idle Ordered Set (EOS) have been received. After the Electrical Idle Ordered Set is received, the receiver should wait for a minimum of 50 ns (TTX-IDLE-MIN) before enabling its Electrical Idle Exit detector.

These signals (one per channel, two per DCU) should be routed through the PCS, and should be made available to the FPGA core. The required state machine(s) to support electrical idle can then be constructed in the FPGA core.

©2014-2023 Lattice Semiconductor Corp. All Lattice trademarks, registered trademarks, patents, and disclaimers are as listed at www.latticesemi.com/legal.
All other brand or product names are trademarks or registered trademarks of their respective holders. The specifications and information herein are subject to change without notice.

8.27. PCI Express Receiver Detection

Figure 8.12 shows a receiver detection sequence. A receiver detection test can be performed on each channel of a DCU independently. Before starting a receiver detection test, the transmitter must be put into electrical idle by setting the tx_idle_ch#_c input high. The receiver detection test can begin 120 ns after tx_elec_idle is set high by driving the appropriate pci_det_en_ch#_c high. This puts the corresponding SerDes Transmit buffer into receiver detect mode by setting the driver termination to high impedance and pulling both differential outputs to VCCOB through the high impedance driver termination.

Setting the SerDes Transmit buffer into the receiver detect state takes up to 120 ns. After 120 ns, the receiver detects test can be initiated by driving the channel's pcie_ct_ch#_c input high for four-byte (word) clock cycles. The corresponding channel's pcie_done_ch#_s is then cleared asynchronously. After enough time for the receiver detect test to finish has elapsed (determined by the time constant on the transmit side), the pcie_done_ch#_s receiver detect status port goes high and the receiver detects status can be monitored at the pcie_con_ch#_s port. If at that time the pcie_con_ch#_s port is high, then a receiver has been detected on that channel. If, however, the pcie_con_ch#_s port is low, then no receiver has been detected for that channel. Once the receiver detection test is complete, tx_idle_ch#_c can be deasserted.

Receiver detection proceeds as follows:

1. You must drive the pcie_det_en high, putting the corresponding TX driver into receiver detect mode. This sets the driver termination to high-impedance (5 kΩ) and pulls both outputs of the differential driver toward common mode through the high-impedance driver termination. The TX driver takes some time to enter this state so the pcie_det_en must be driven high for at least 120 ns before pcie_ ct is asserted.
2. You must drive the pcie_ct high for four-byte clocks.
3. SerDes drives the corresponding pcie_done low.
4. SerDes drives the internal signal (corresponding to pcie_ct) for as long as it is required (based on the time constant) to detect the receiver.
5. SerDes drives the corresponding pcie_con connection status.
6. SerDes drives the corresponding pcie_done high
7. You can use this asserted state of pcie_done to sample the pcie_con status to determine if the receiver detection was successful.

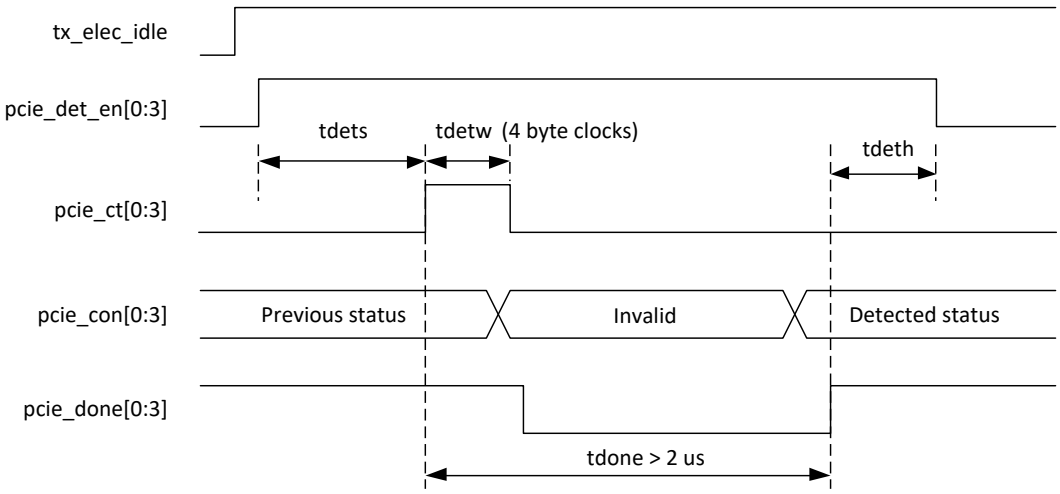

Figure 8.12. PCI Express Mode Receiver Detection Sequence

©2014-2023 Lattice Semiconductor Corp. All Lattice trademarks, registered trademarks, patents, and disclaimers are as listed at www.latticesemi.com/legal.
All other brand or product names are trademarks or registered trademarks of their respective holders. The specifications and information herein are subject to change without notice.

8.28. PCI Express Power Down Mode

rx_serdes_rst_ch[1:0] reset signal should be used instead of rx_pwrup_ch[1:0] signal. This allows the RX termination to remain enabled at 50 Ω so that the far-end transmitter can detect that a receiver is connected.

8.29. PCI Express Beacon Support

This section highlights how the LFE5UM/LFE5UM5G PCS can support Beacon detection and transmission. The PCI Express requirements for Beacon detection are presented with the PCS support for Beacon transmission and detection.

8.29.1.1. Beacon Detection Requirements

- Beacon is required for exit from L2 (P2) state.
- Beacon is a DC-balanced signal of periodic arbitrary data, which is required to contain some pulse widths ≥ 2 ns (500 MHz) and < 16 µs (30 kHz).
- The maximum time between pulses should be < 16 µs.
- DC balance must be restored within < 32 µs.
- For pulse widths > 500 ns, the output beacon voltage level must be 6 db down from VTX-DIFFp-p (800 mV to 1200 mV).
- For pulse widths < 500 ns, the output beacon voltage level must be ≤ VTX-DIFFp-p and ≥ 3.5 db down from VTX-DIFFp-p.

8.29.1.2. PCS Beacon Detection Support

- The signal loss threshold detection circuit senses if the specified voltage level exists at the receiver buffer.
- This is indicated by the rlos_lo_ch[1:0] signal.
- This setting can be used both for PCI Express Electrical Idle Detection and PCI Express beacon detection (when in power state P2).
- The remote transmitting device can have a beacon output voltage of 6 db down from VTX-DIFFpp (that is 201 mV). If this signal can be detected, then the beacon is detected.

8.29.1.3. PCS Beacon Transmission Support

Sending the K28.5 character (IDLE) (5 ones followed by 5 zeroes) provides a periodic pulse with 2 ns occurring every 2 ns (1.0 UI = 400 ps, multiplied by 5 = 2 ns). This meets the lower requirement. The output beacon voltage level can then be VTX-DIFFp-p. This is a valid beacon transmission.

©2014-2023 Lattice Semiconductor Corp. All Lattice trademarks, registered trademarks, patents, and disclaimers are as listed at www.latticesemi.com/legal.
All other brand or product names are trademarks or registered trademarks of their respective holders. The specifications and information herein are subject to change without notice.

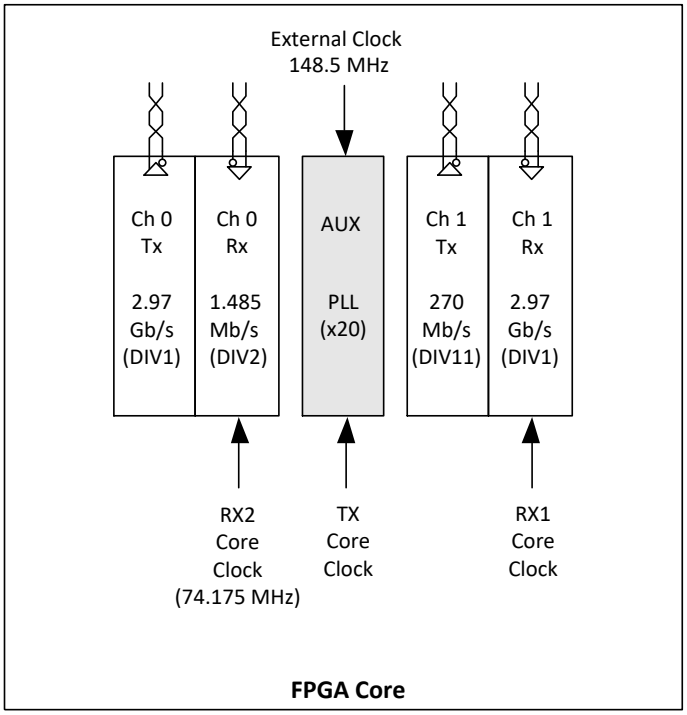

Figure 8.13. Example: 3G/HD/SD RX/TX At Different Rate

To support the major application requirements, a selectable DIV per RX and TX is supported. In LFE5UM/LFE5UM5G, DIV11 has been added. One potential multi-rate configuration is to provide a 148.5 MHz REFCLK from the primary pins to the TX PLL. The TX PLL would be in the x20 mode. The resulting output clock would be 2.97 GHz. Then, by using the DIV2 for 1.485 Gb/s and DIV11 for 270 Mb/s, a very quick switchover can be achieved without having to re-train and lock the PLL.

8.30. Serial Digital Video and Out-Of-Band Low-Speed SerDes Operation

The LFE5UM/LFE5UM5G SerDes/PCS supports any data rates that are slower than what the SerDes TX PLL and RX CDR natively support (<250 Mb/s: Out-Of-Band signal, OOB), by bypassing the receiver CDR and associated SerDes/PCS logic (for example 100 Mb/s Fast Ethernet, SD-SDI at 143 Mb/s or 177 Mb/s). Though these out-of-band paths primarily use low data rates, higher rates can be used for other functional reasons. See the Multi-Rate SMPTE Support section of this document for more information.

In addition, for SD-SDI, these rates sometimes must co-exist on the same differential RX pair with HD-SDI rates (that is SD-SDI rates may be active and then the data rate may switch over to HD-SDI rates). Since there is no way to predict which of these two rates are in effect, it is possible to send the input data stream to two SerDes in parallel, a high-speed SerDes (already in each DCU) and a lower-speed SerDes (implemented outside the DCU). One possible implementation is shown in Figure 8.14.

There is an input per channel RXD_LDR, low data rate single-ended input from the RX buffer to the FPGA core. In the core, a low-speed Clock Data Recovery (CDR) block or a Data Recovery Unit (DRU) can be built using soft logic. A channel register bit, RXD_LDR_EN, can enable this data path. If enabled by another register bit, a signal from the FPGA can also enable this in LFE5UM/LFE5UM5G.

In the transmit direction, it is also possible to use a serializer built-in soft logic in the FPGA core and use the TXD_LDR pin to send data into the SerDes. It is muxed in at a point just before the de-emphasis logic near where the regular high-speed SerDes path is muxed with the boundary scan path. This is shown conceptually in Figure 8.14. The low data rate path can be selected by setting a channel register bit, TX_LDR_EN.

©2014-2023 Lattice Semiconductor Corp. All Lattice trademarks, registered trademarks, patents, and disclaimers are as listed at www.latticesemi.com/legal.
All other brand or product names are trademarks or registered trademarks of their respective holders. The specifications and information herein are subject to change without notice.

Alternatively, on the output side, the high-speed SerDes is used to transmit either high-speed data, or lower-speed data using decimation (the SerDes continues to run at high-speed, but the output data can only change every nth clock where n is the decimation factor).

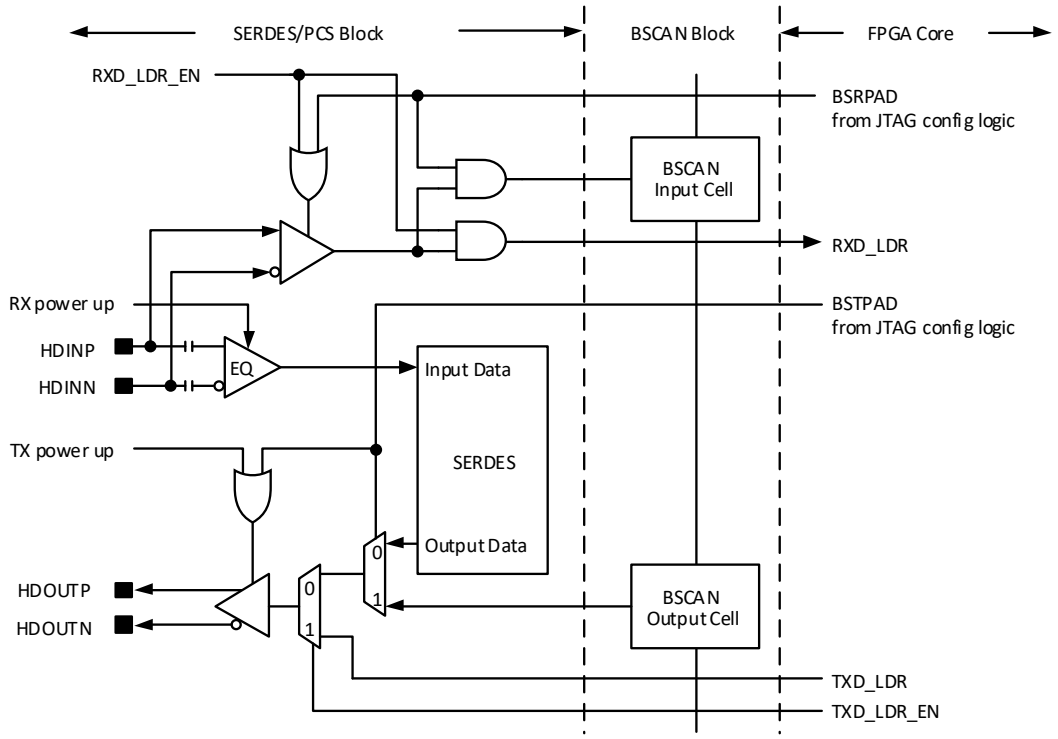

Figure 8.14. Conceptual Low Date Rate Path for Rx and Tx; Example for Out-of-Band Application

8.31. Common Public Radio Interface (CPRI)

The goal of CPRI is to allow base station manufacturers and component vendors to share a common protocol and more easily adapt platforms from one user to another.

Transmit Path

- Serializer
- Transmit State Machine is set to Gigabit Ethernet Mode
- 8b10b Encoding

Receive Path

- Deserializer
- Word alignment based on IEEE 802.3-2002 1000 BASE-X defined alignment characters
- 8b10b Decoding

CPRI does not specify mechanical or electrical interface requirements. In terms of scope, CPRI has a much narrower focus than OBSAI. CPRI looks solely at the link between the RRH and the baseband module(s). In CPRI nomenclature, those modules are known as Radio Equipment (RE) and Radio Equipment Control (REC), respectively. In other words, CPRI is specifying the same interface as the OBSAI RP3 specification. CPRI primarily covers the physical and data link layer of the interface. It also specifies how to transfer the user plane data, control, and management (C&M) plane data, and the synchronization plane data.

CPRI has had better “traction” for two reasons – the muscle of the companies backing it and the focus on just one interface link (between the RF modules and the Baseband modules) and even at that focusing primarily on the physical and data link layers.

©2014-2023 Lattice Semiconductor Corp. All Lattice trademarks, registered trademarks, patents, and disclaimers are as listed at www.latticesemi.com/legal.
All other brand or product names are trademarks or registered trademarks of their respective holders. The specifications and information herein are subject to change without notice.

CPRI allows four line bit rate options; 614.4 Mb/s, 1.2288 Gb/s, 2.4576 Gb/s, 3.072 Gb/s, and 4.9152 Gb/s (ECP5-5G only); at least one of these rates needs to be supported. The higher line rate is always compared to the immediately lower one.

CPRI does not have a mandatory physical layer protocol, but the protocol used must meet the BER requirement of 1 x 10-12. It also specifies the clock stability and the phase noise requirements.

CPRI also recommends two electrical variants: high voltage (HV) and low voltage (LV). HV is guided by 1000Base-CX specifications in IEEE 802.3-2002 clause 39 with 100 Ω impedance. LV is guided by XAUI. LV is recommended for all rates and is the focus of this device.

It is important to understand two link layer requirements when dealing with the CPRI specifications:

- Link delay accuracy and cable delay calibration
- Startup synchronization

8.31.1.1. Link Delay Accuracy and Cable Delay Calibration

The REs or RRHs are frequently locked to the REC or BTS. Thus, in this synchronous system, it is necessary to calibrate all delays between RRHs and the BTS to meet air-interface timing requirements. The interface requires the support of the basic mechanisms to enable calibrating the cable delay on links and the round trip delay on single- and multi-hop connections. Specifically, the reference points for delay calibration and the timing relationship between input and output signals at RE (Radio Equipment) are defined. All definitions and requirements are described for a link between REC Master Port and RE Slave Port in the single-hop scenario as shown in Figure 8.15.

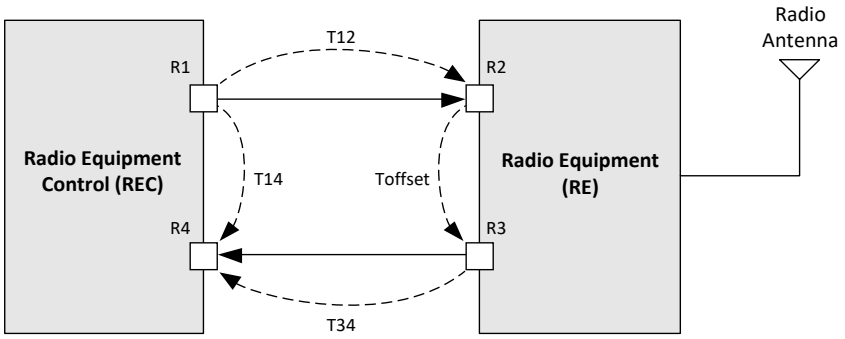

Figure 8.15. Link Between REC Master Port and RE Slave Port (Single Hop Scenario)

Reference points R1-4 correspond to the output point (R1) and the input point (R4) of REC, and the input point (R2) and the output point (R3) of an RE terminating a particular logical connection. The antenna is shown as Ra for reference.

- T12 is the delay of the downlink signal from the output point of REC (R1) to the input point of RE (R2), essentially the downlink cable delay.
- T34 is the delay of the uplink signal from the output point of RE (R3) to the input point of the REC (R4), essentially the uplink cable delay.
- Toffset is the frame offset between the input signal at R2 and the output signal at R3.
- T14 is the frame timing difference between the output signal at R1 and the input signal at R4 (that is the round trip delay – RTT).

Delay measurement is accomplished using frame timing. CPRI has a 10 ms frame based on the UMTS radio frame number or Node B Frame Number, also known as BFN. Each UMTS Radio Frame has 150 hyperframes (that is each HyperFrame is 66.67 µs) with the corresponding hyperframe number (HFN = 0≤Z≤149). Each hyperframe has 256 (0≤W≤255) basic frames (that is each basic frame is 260.42 ns = Tchip or Tc).

An RE determines the frame timing of its output signal (uplink) to be the fixed offset (Toffset) relative to the frame timing of its input signal (downlink). Toffset is an arbitrary value, which is greater than or equal to 0 and less than 256 Tc (it cannot slip beyond a hyperframe). Different REs may use different values for Toffset. REC knows the value of Toffset of each RE in advance (pre-defined value or RE informs REC by higher layer message).

To determine T14, the downlink BFN and HFN from REC to RE is given back in uplink from the RE to the REC. In the case of an uplink-signaled error condition, the REC treats the uplinks BFN and HFN as invalid. So, T14 = T12 + Toffset + T34.

©2014-2023 Lattice Semiconductor Corp. All Lattice trademarks, registered trademarks, patents, and disclaimers are as listed at www.latticesemi.com/legal.
All other brand or product names are trademarks or registered trademarks of their respective holders. The specifications and information herein are subject to change without notice.

As stated earlier, the system is synchronous. Further, assuming that hyperframes are of fixed length and the RRH-BTS interconnect (cable length) is equal in both directions (that is T12 = T34, both optical fibers are in one bundle), the interconnect delay devolves down to (T14 – Toffset)/2. The method for determining T14 has been discussed earlier. So the major component that affects delay calibration is Toffset. Thus, the interconnect delay is the difference in hyperframe arrival and departure times measured at each side of the link.

Delay calibration requirements are driven by 3GPP and UTRAN requirements specifically requirements R-21 in the CPRI specification (CPRI v3.0 page 20), which states that the accuracy of the round trip delay measurement of the cable delay of one link is ±Tc/16. Additionally, requirement R-20 states that the round trip time absolute accuracy of the interface, excluding the round trip group delay on the transmission medium (excluding the cable length), shall meet a similar requirement (±Tc/16 for T14). Taking into account the previous discussion, the absolute link delay accuracy in the downlink between REC master port and RE slave port excluding the cable length is half of the above requirement (±Tc/32 or approximately 8 ns (8.138 ns)). Thus, both T14 and Toffset need absolute accuracy less than ±8 ns.

Next it is important to determine how many bits of uncertainty can be acceptable for the different rates. Essentially, the various CPRI and OBSAI bit rates can be multiplied by 8.138 ns to determine the number of bits worth of indeterminism/variance is acceptable. The impact of this becomes clear subsequently when the SerDes serial/parallel data path is discussed.

Most SerDes have a certain level of uncertainty that is introduced in the serializing and de-serializing process. Thus, a SerDes with 16-bit bus architecture may have twice the delay uncertainty as a SerDes with an 8-bit architecture because the number of bits per word is doubled.

Tx and Rx latency is listed in Table 11.2. The table also lists the variability between the latency. This variability directly contributes to the absolute delay accuracy required from earlier discussion. The variability comes from three sources: TX FPGA Bridge FIFO, RX FPGA Bridge FIFO and RX Clock Tolerance Compensation FIFO. Since the CPRI system is a synchronous system, the RX CTC FIFO is bypassed and the RX recovered clock is used.

The remaining contributors to the latency variability are the FPGA Bridge FIFO. This FIFO can be bypassed if the interface to the FPGA is 8-bit bus mode. In 16-bit interface mode, the FPGA Bridge FIFO cannot be bypassed because the 2:1 gearing is done via the FIFO.

8.32. SDI (SMPTE) Mode

The SDI mode of the LFE5UM/LFE5UM5G SerDes/PCS block supports all three SDI modes, SD-SDI, HD-SDI and 3G-SDI.

Transmit Path

- Serializer

Receive Path

- Deserializer
- Optional word alignment to user-defined alignment pattern.

The following data rates are the most popular in the broadcast video industry.

- SD-SDI (SMPTE259M): 270 Mb/s
- HD-SDI (SMPTE292M): .... 1.485 Gb/s; Fractional Rate: 1.485 Gb/s / 1.001 = 1.4835 Gb/s
- 3G-SDI (SMPTE424M): .... 2.97 Gb/s; Fractional Rate: 2.97 Gb/s / 1.001 = 2.967 Gb/s

SDI connections do not require to be bi-directional, that means the Rx and Tx channels can be running at different data rates in SD/HD/3G. The LFE5UM/LFE5UM5G product family, mixing of these rates in one Rx/Tx channel is possible because each of the Rx and Tx channel has its own rate divider. The maximum rate generated by the TxPLL or CDR clock recovery circuit at 2.97 Gb/s can support 3G-SDI in the Rx/Tx channels independently with its own /1 rate divider; supports HD-SDI with independent /2 rate divider; and supports SD-SDI with independent /11 rate divider.

Most designers have indicated that they would like to see support on dynamically switching between these 3 rates (SD, HD, and 3G). The reason is that in a broadcast studio, or a satellite head-end or cable head-end, they do not necessarily have prior knowledge of what the RX data rate is.

©2014-2023 Lattice Semiconductor Corp. All Lattice trademarks, registered trademarks, patents, and disclaimers are as listed at www.latticesemi.com/legal.
All other brand or product names are trademarks or registered trademarks of their respective holders. The specifications and information herein are subject to change without notice.

The time to switch between different rates should be kept as minimal as possible. On the Tx side, the switching can be very quick, by simply changing the selection of the /1, /2, or /11 rate divider. The TxPLL stays locked to 2.97 MHz, and is not affected.

On the Rx side, each channel has its own CDR, Clock Data Recovery circuit. The switching between different data rates by changing the rate divider causes a little more time for the CDR to be re-locked.

Depending on the geography where the equipment is deployed, either the full HD/3G-SDI rates (Europe/Asia) are used while transmitting video or the fractional rates (North America – NTSC). This allows us to develop two potential solution example cases for multi-rate SMPTE support with high DCU utilization. Note that simultaneous support of 3G/HD Full TX Rate(s) and Fractional TX Rate(s) is not possible in the same DCU. In general, based on the above, geographically partitioned usage is an acceptable limitation.

Also, note the following reference clock requirements:

- Tri-rate SDI (SD/HD/3G): reference clock frequency should be set to 148.5 MHz, with 20X setting to generate full data rate at 2.97 Gb/s
- Dual-rate (HD/3G): reference clock frequency should be 148.5 MHz for full SDI rate, and 148.35 MHz for fractional SDI rate
- SD-SDI Only: reference clock frequency should be 54 MHz. This is because the F_{min} for reference clock is 50 MHz. SD-SDI should be using 10X setting to generate full data rate at 540 Mb/s, and use /2 rate-divider for 270 Mb/s SD-SDI

The LFE5UM/LFE5UM5G SDI SerDes supports all SMPTE compliance tests, except 3G-SDI Level-A pathological compliance test pattern.

8.33. Embedded Display Port (eDP)

The eDP mode of the LFE5UM/LFE5UM5G SerDes/PCS block supports two different eDP modes, Reduced Bit Rate (RBR) and High Bit Rate (HBR).

Transmit Path

- Serializer

Receive Path

- Deserializer
- Optional word alignment to user-defined alignment pattern. The following data rates are used in the eDP interface.
- RBR: 1.62 Gb/s
- HBR: 2.70 Gb/s

eDP is an emerging standard that is customized from the Display Port standard. The LFE5UM/LFE5UM5G families provide the transmit and receive buffers for the eDP interface. The FPGA logic allows you to fully customize his requirements, including the Auxiliary channel.

The following reference clock is required for these eDP modes:

- RBR: 162 MHz
- HBR: 135 MHz

©2014-2023 Lattice Semiconductor Corp. All Lattice trademarks, registered trademarks, patents, and disclaimers are as listed at www.latticesemi.com/legal.
All other brand or product names are trademarks or registered trademarks of their respective holders. The specifications and information herein are subject to change without notice.

9. Example of Dual-based Channel Arrangements

This section shows five examples of how instances created in your view, and how they are placed and connected physically. You can see how the improved granularity works in dual base architecture.

9.1. Tx Case 1

All channels in Dual0 and Dual1 use D0 REFCLK(D0EXTREFB or FPGA txrefclk) and D0TXPLL. In this example, all four channels use same tx_bitclk from D0TXPLL.

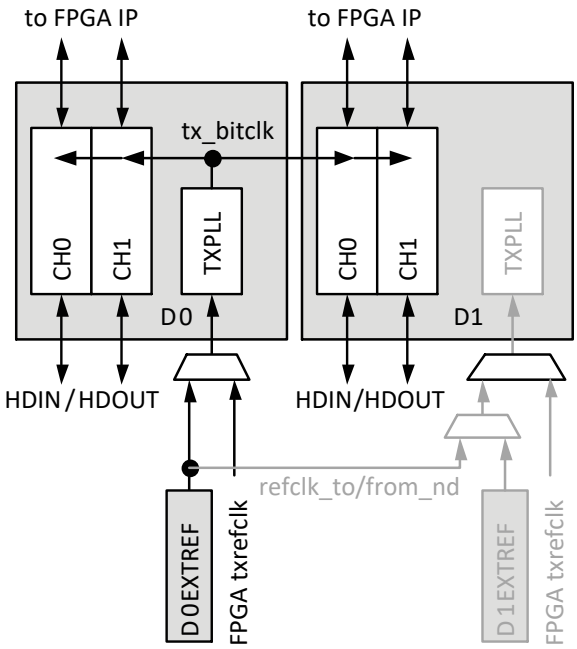

Figure 9.1. Tx Case 1

9.2. Tx Case 2

Dual0 channels use D0 Refclk (D0EXTREFB or FPGA txrefclk) and D0TXPLL. Dual1 channels use D0 Refclk (D0EXTREFB or FPGA txrefclk) and D1TXPLL.

©2014-2023 Lattice Semiconductor Corp. All Lattice trademarks, registered trademarks, patents, and disclaimers are as listed at www.latticesemi.com/legal.
All other brand or product names are trademarks or registered trademarks of their respective holders. The specifications and information herein are subject to change without notice.

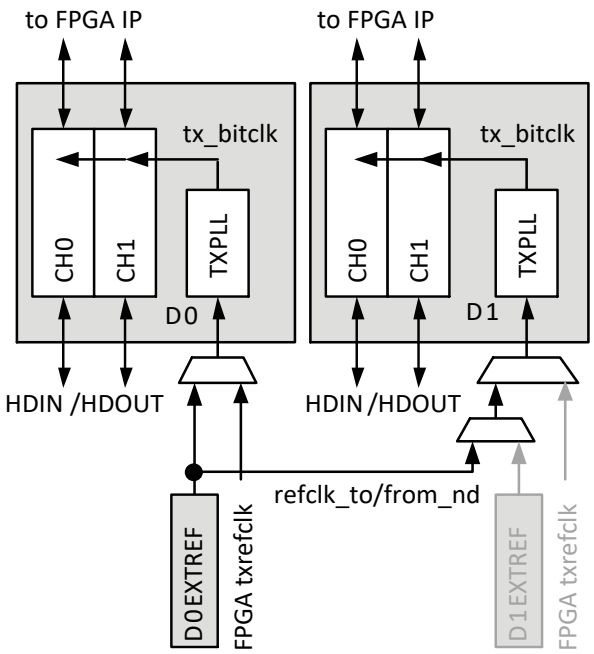

Figure 9.2. Tx Case 2

In this example, both D0TXPLL and D1TXPLL use D0 Refclk. The tx_bitclks may have different frequency depending on the TXPLL multiplier. TXPLL multiplier is not a user attribute but is automatically calculated with data rate and refclk frequency.

9.3. Tx Case 3

Dual0 channels use D0 Refclk (D0EXTREFB or FPGA txrefclk) and D0TXPLL Dual1 channels use D1 Refclk (D1EXTREFB or FPGA txrefclk) and D1TXPLL. In this example, no clocks are crossing dual boundary.

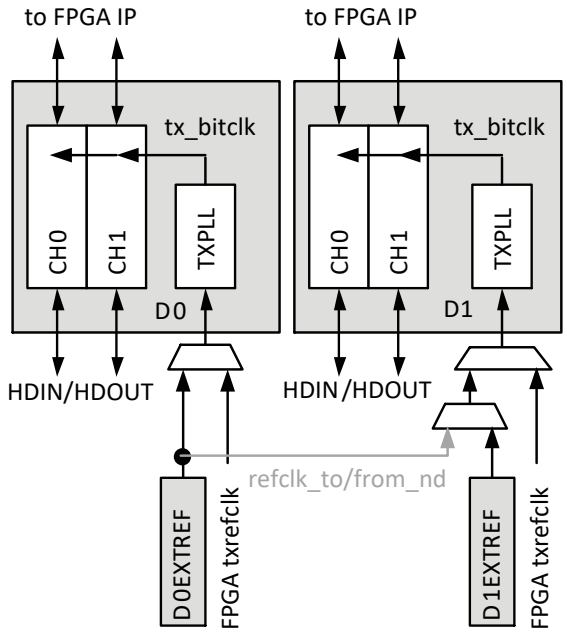

Figure 9.3. Tx Case 3

©2014-2023 Lattice Semiconductor Corp. All Lattice trademarks, registered trademarks, patents, and disclaimers are as listed at www.latticesemi.com/legal.
All other brand or product names are trademarks or registered trademarks of their respective holders. The specifications and information herein are subject to change without notice.

9.4. Rx Case1

All channels in Dual0 and Dual1 use D0 REFCLK (D0EXTREFB or FPGA rxrefclk [cdr_refclk]).

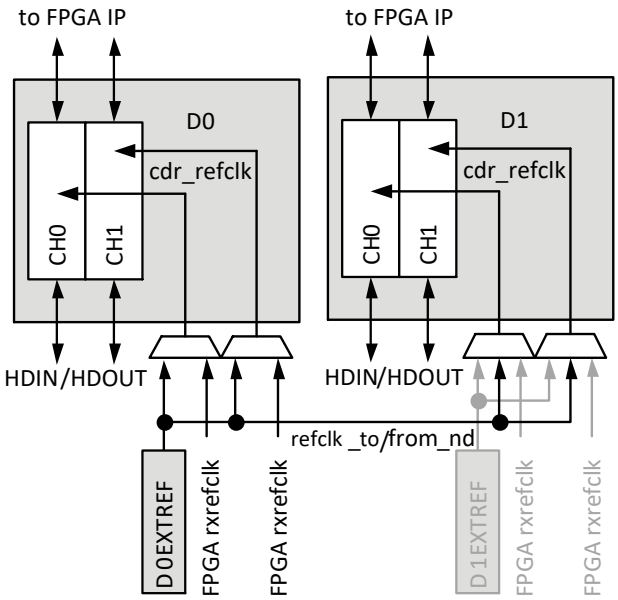

Figure 9.4. Rx Case 1

9.5. Rx Case 2

Dual0 channels use Dual0 Refclk (D0EXTREFB or FPGA rxrefclk). Dual1 channels use Dual1 Refclk (D1EXTREFB or FPGA rxrefclk).

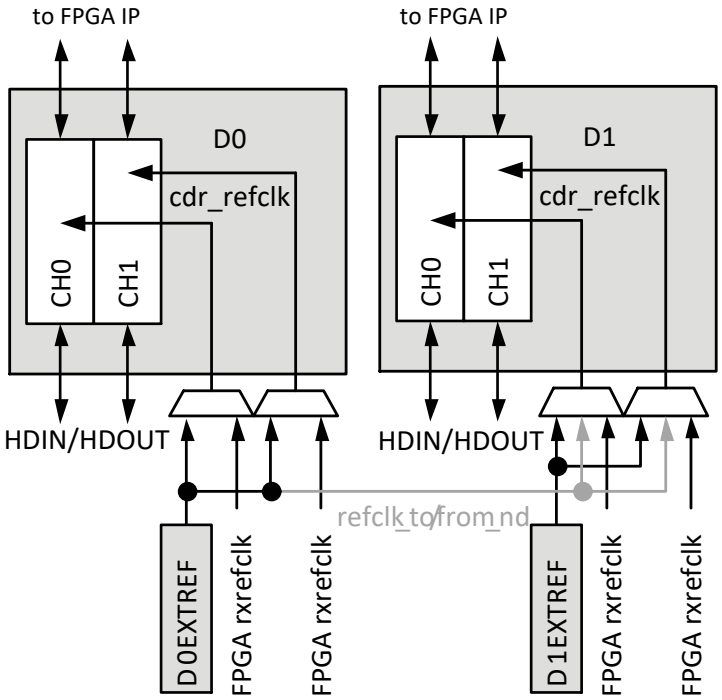

Figure 9.5. Rx Case 2

©2014-2023 Lattice Semiconductor Corp. All Lattice trademarks, registered trademarks, patents, and disclaimers are as listed at www.latticesemi.com/legal.
All other brand or product names are trademarks or registered trademarks of their respective holders. The specifications and information herein are subject to change without notice.

10. FPGA Interface Clocks

Figure 10.1 shows a conceptual diagram of the later stage of the PCS core and the FPGA Bridge and the major clocks that cross the boundary between PCS and the FPGA.

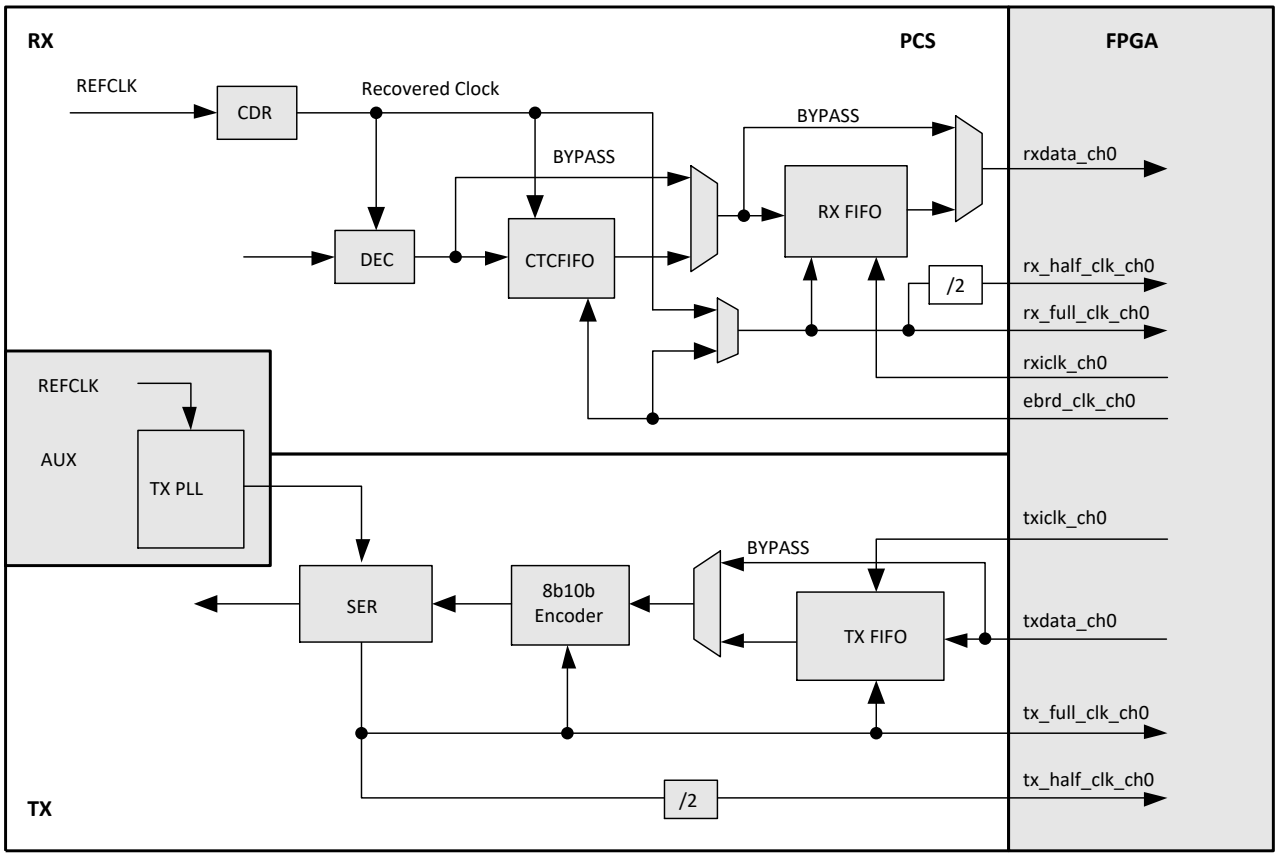

Figure 10.1. Conceptual PCS/FPGA Clock Interface Diagram

In the above diagram and the subsequent clock diagrams in this section, note that suffix *i* indicates the index [1:0] that is one for each channel. It is a requirement that if any of the selectors to the clock muxes are changed by writes to register bits, the software agent resets the logic clocked by that muxed clock.

The PCS outputs eight clocks. There are two transmit clocks (per channel) and two receive clocks (per channel). The two transmit clocks provide full rate and half rate clocks and are all derived from the TX PLL. There are also two clocks (full and a half) per receive channel. These clocks are muxed into two clocks output per channel (rx_pclk, tx_pclk). These clocks are routed to PCLK to minimize skew and jitter.

Illustrations of how the clocks are used can be seen in the interface cases shown in Table 10.1.

©2014-2023 Lattice Semiconductor Corp. All Lattice trademarks, registered trademarks, patents, and disclaimers are as listed at www.latticesemi.com/legal.
All other brand or product names are trademarks or registered trademarks of their respective holders. The specifications and information herein are subject to change without notice.

Table 10.1. Seven User Interface Cases between SerDes/PCS Dual and FPGA Core

Interface	Data Path Width	Rx CTC FIFO	Rx Down Sample FIFO	Tx Up Sample FIFO	Notes
Case I_a	8/10 bit	Yes	Yes	Yes	(2)
Case I_b	8/10 bit	Bypass	Yes	Yes	(2)
Case I_c	8/10 bit	Yes	Bypass	Bypass	(2)
Case I_d	8/10 bit	Bypass	Bypass	Bypass	(2)
Case II_a	16/20 bit	Yes	Yes	Yes	(1), (2)
Case II_b	16/20 bit	Bypass	Yes	Yes	(1), (2)

Notes:

1. When using a 16/20-bit data path width, the Tx phase-shift (upsample) FIFO and the RX phase-shift FIFO (downsample) are always used.
2. They cannot be bypassed. It is not required that both Rx and Tx have the same FPGA interface data path width simultaneously. There is independent control available. For brevity, they have been represented together in the same use case.
3. The Tx phase-shift (upsample) FIFO and the RX phase-shift FIFO (downsample) don't need to be bypassed together. They are independently controllable. Again, for brevity, they have been represented here in the same case.

10.1. 2:1 Gearing

For the guaranteed performance of the FPGA global clock tree, it is recommended to use a 16/20-bit wide interface for SerDes line rates greater than 2.5 Gb/s. In this interface, the FPGA interface clocks are running at half the byte clock frequency.

Even though the 16/20-bit wide interface running at half the byte clock frequency can be used with all SerDes line rates, the 8/10-bit wide interface is preferred when the SerDes line rate is low enough to allow it (2.5 Gb/s and below) because this results in the most efficient implementation of IP in the FPGA core.

The decision matrix for the six interface cases is explained in Table 10.2.

Table 10.2. Decision Matrix for Six Interface Cases

SerDes Line Rate	Dapath Width	Multi-Channel Alignment Required?	CTC Required?	RX FIFO Required?	Interface Case
2.5 Gb/s and below	8/10 Bit (1:1 Gearing)	No, Single-Channel Link	Yes	Yes	Case I_a[1]
				No	Case I_c[1]
			No	Yes	Case I_b[2]
				No	Case I_d[2]
		Yes, Multi-Channel Link	Must Bypass, CTC Not Used	Yes	Case I_b[3]
				No	Case I_d[3]
Above 2.5 Gb/s[7]	16/20 Bit (2:1 Gearing)	No, Single-Channel Link	Yes	Yes	Case II_a[4]
			No	Yes	Case II_b[5]
		Yes, Multi-Channel Link	Must Bypass, CTC Not Used	Yes	Case II_b[6]

Notes:

1. This case is intended for single-channel links at line rates of 2.5 Gb/s and lower (8/10-bit wide interface) that require clock tolerance compensation in the DCU. CTC is required when both ends of the link have separate reference clock sources that are within ±300 ppm of each other. Case I_a is used if the IP in the core requires the RX phase-shift FIFO. Case I_b is used if the IP does not require this FIFO.
2. This case is intended for single-channel links at line rates of 2.5 Gb/s and lower (8/10-bit wide interface) that do NOT require clock tolerance compensation in the DCU. CTC is not required when both ends of the link are connected to the same reference clock source. This is often the case for chip-to-chip links on the same circuit board. There is exactly 0 ppm difference between the reference clocks and so CTC is not required and can be bypassed. CTC is also not required in the DCU when this function is performed by the IP in the core.

©2014-2023 Lattice Semiconductor Corp. All Lattice trademarks, registered trademarks, patents, and disclaimers are as listed at www.latticesemi.com/legal.
All other brand or product names are trademarks or registered trademarks of their respective holders. The specifications and information herein are subject to change without notice.

3. This case is intended for multi-channel links at line rates of 2.5 Gb/s and lower (8/10-bit wide interface). Multi-channel alignment MUST be done in the FPGA design. Since multi-channel alignment must be done prior to CTC, the CTC FIFO in the DCU MUST be bypassed when multi-channel alignment is required and so both multi-channel alignment and CTC (if required) are done by the FPGA design.
4. This case is intended for single-channel links at line rates of 3.2 Gb/s and lowers that require a 2:1 gearbox between the DCU and the FPGA core (16/20-bit wide interface). Clock tolerance compensation is included in the DCU. CTC is required when both ends of the link have separate reference clock sources that are within ±300 ppm of each other.
5. This case is intended for single-channel links at line rates of 3.2 Gb/s and lowers that require a 2:1 gearbox between the DCU and the FPGA core (16/20-bit wide interface). Clock tolerance compensation is NOT included in the DCU. CTC is not required when both ends of the link are connected to the same reference clock source. This is often the case for chip-to-chip links on the same circuit board. There is exactly a 0 ppm difference between the reference clocks and so CTC is not required and can be bypassed. CTC is also not required in the DCU when this function is performed by the FPGA design.
6. This case is intended for multi-channel links at line rates of 3.2 Gb/s and lower that require a 2:1 gearbox between the DCU and the FPGA core (16/20-bit wide interface). Multi-channel alignment MUST be done by the FPGA design. Since multi-channel alignment must be done prior to CTC, the CTC FIFO in the DCU MUST be bypassed when multi-channel alignment is required and so both multi-channel alignment and CTC (if required) are done by the FPGA design.
7. Higher than 3.2 Gb/s, the 16/20-bit needs further gearing with additional 2:1 Gearing in the core, to increase the data path width, and reduce the clock frequency in the core.

10.2. Case I_a: 8/10-bit, CTC FIFO NOT Bypassed

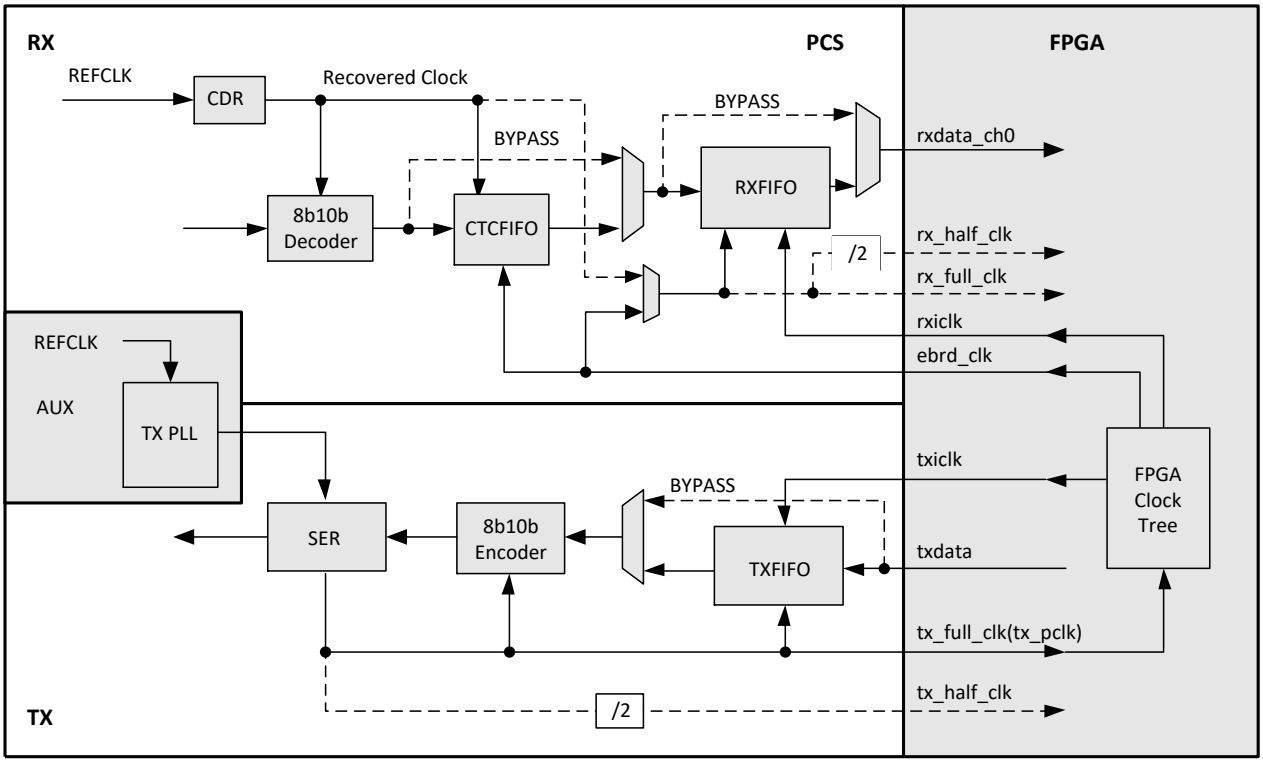

Figure 10.2. 8/10-Bit, CTC FIFO, and Rx/Tx FIFOs NOT Bypassed

- The TX FIFO acts as a Phase Shift FIFO only in this case.
- The RX FIFO acts as a Phase Shift FIFO only in this case.
- The full rate clock from the TX PLL (tx_full_clk) has direct access to the FPGA center clock mux. This is a relatively higher-performance path. A Global Clock Tree out of the Center Clock Mux is used to clock the user's interface logic in the FPGA. Some leaf nodes of the clock tree are connected to the FPGA Transmit Input clock (txiclk), the CTC FIFO Read Clock per Channel (ebrd_clk) through the FPGA Receive Input clock (rxiclk). This case is possibly the most common single-channel use case.

©2014-2023 Lattice Semiconductor Corp. All Lattice trademarks, registered trademarks, patents, and disclaimers are as listed at www.latticesemi.com/legal.
All other brand or product names are trademarks or registered trademarks of their respective holders. The specifications and information herein are subject to change without notice.

Example of Clock and Data Signals Interface in FPGA Logic (Case I_a)

Below is a portion of the SerDes/PCS module instantiation in the top module which describes how clock and data ports are mapped in Verilog.

```
.txiclk_ch0(txclk),
.rxiclk_ch0(txclk),
.rx_full_clk_ch0(),
.tx_full_clk_ch0(txclk),
.tx_half_clk_ch0(),
.txdata_ch0(txdata_2_pcs),
.rxdata_ch0(rxdata_from_pcs),
.tx_k_ch0(txkcntl_2_pcs),
.rx_k_ch0(rxkcntl_from_pcs),
```

ebrd_clk_ch0 is routed automatically by the software, depending on the case.

Note that tx_full_clk_ch0 uses the wire name 'txclk' and feeds both txi_clk_ch0 and rxi_clk_ch0, as shown in Figure 10.2.

10.3. Case I_b: 8/10-bit, CTC FIFO Bypassed

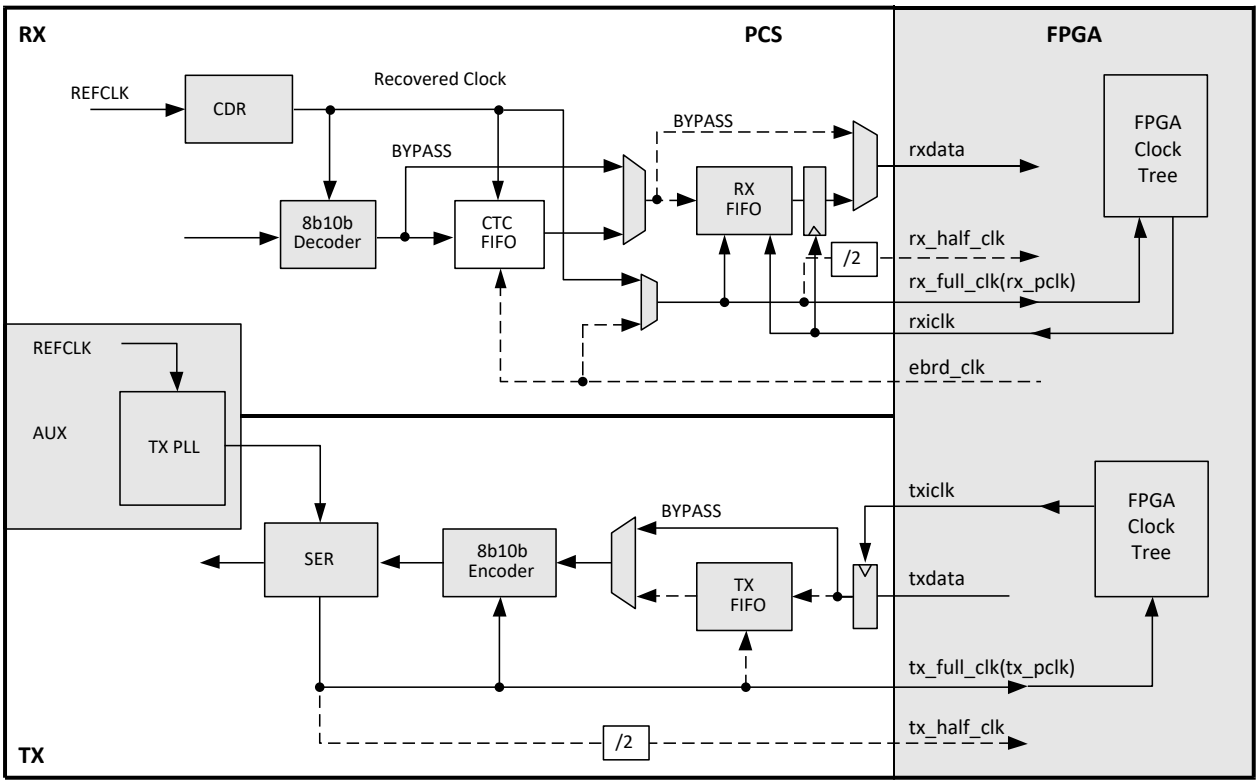

Figure 10.3. 8/10-Bit, CTC FIFO Bypassed

©2014-2023 Lattice Semiconductor Corp. All Lattice trademarks, registered trademarks, patents, and disclaimers are as listed at www.latticesemi.com/legal.
All other brand or product names are trademarks or registered trademarks of their respective holders. The specifications and information herein are subject to change without notice.

- The Tx FIFO acts as a Phase Shift FIFO only in this case.
- The Rx FIFO acts as a Phase Shift FIFO only in this case.
- The Tx FPGA Channel input clock is clocked similarly as in the previous case using a clock tree driven by a direct connection of the full rate transmit FPGA output clock to the FPGA center clock mux. Once the CTC FIFO is bypassed, the recovered clock needs to control the write port of the RX FIFO. The recovered clock of each channel may need to drive a separate local or global clock tree (that is up to four local or global clock trees per DCU). The clock tree then drives the FPGA to receive clock input to control the read port of the RX FIFO. The reason for bypassing the CTC FIFO, in this case, is most likely for doing multi-channel alignment in the FPGA core. It implies that CTC using an elastic buffer is done in the FPGA core. The CTC FIFOs can be written by either the recovered clocks or by a master recovered clock. The read of the CTC FIFO is done using the Tx clock through the Tx clock tree.

10.4. Case I_c: 8/10-bit, FPGA Bridge FIFOs Bypassed

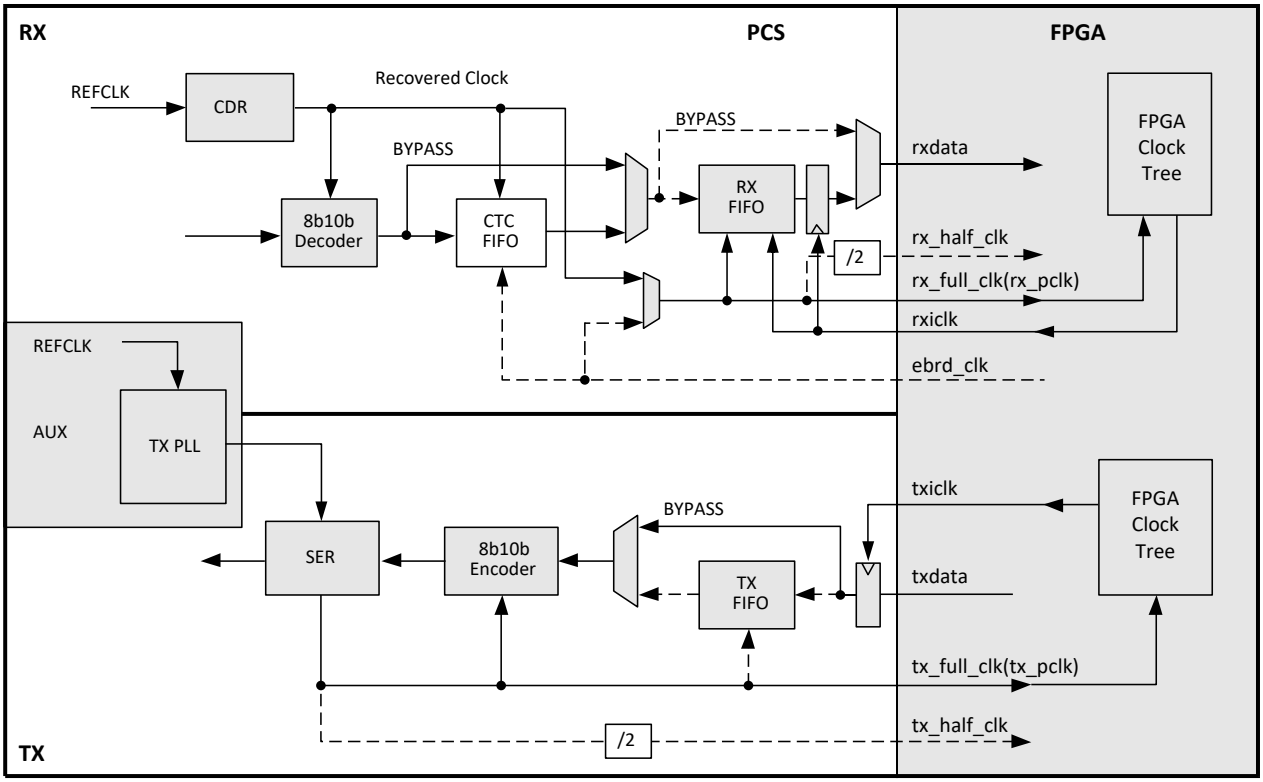

Figure 10.4. 8/10-Bit, Rx/Tx FIFO Bypassed

- The Tx channel clocking is similar to the previous two cases. On the Rx channel, the FPGA input clock is now ebrd_clki. The FPGA TX clock tree drives this clock. In this case, ebrd_clki is automatically routed by the software.

©2014-2023 Lattice Semiconductor Corp. All Lattice trademarks, registered trademarks, patents, and disclaimers are as listed at www.latticesemi.com/legal.
All other brand or product names are trademarks or registered trademarks of their respective holders. The specifications and information herein are subject to change without notice.

10.5. Case I_d: 8/10-bit, CTC FIFO and FPGA Bridge FIFOs Bypassed

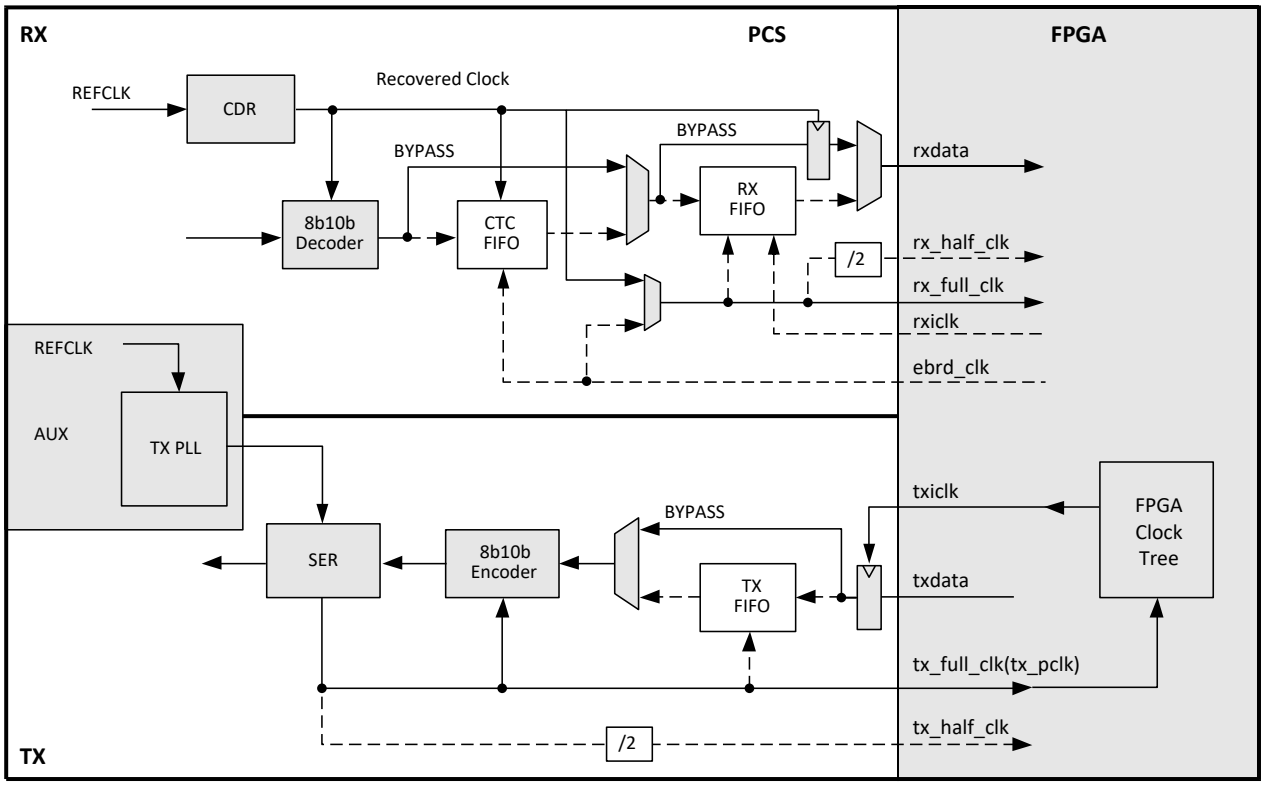

Figure 10.5. 8/10-Bit, CTC FIFO, and Rx/Tx FIFOs Bypassed

- FPGA clock trees can be interchangeably thought of as clock domains in this case. The Tx channel clocking is similar to the previous three cases. On the Rx channel, the recovered channel Rx clock is sent out to the FPGA. This case is useful for supporting video applications.

©2014-2023 Lattice Semiconductor Corp. All Lattice trademarks, registered trademarks, patents, and disclaimers are as listed at www.latticesemi.com/legal.
All other brand or product names are trademarks or registered trademarks of their respective holders. The specifications and information herein are subject to change without notice.

10.6. Case II_a: 16/20-bit, CTC FIFO NOT Bypassed

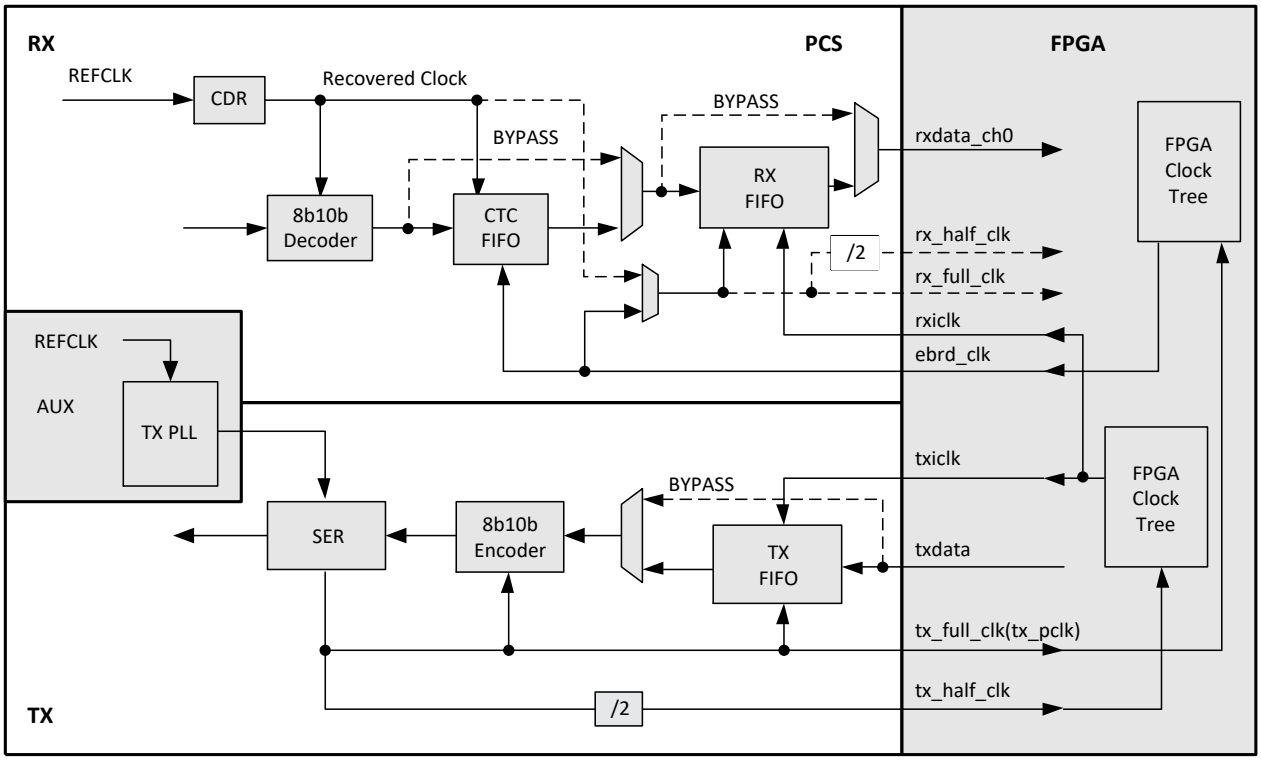

Figure 10.6. 16/20-Bit, CTC FIFO, and Rx/Tx FIFOs NOT Bypassed

- The Tx FIFO acts both as a Phase Shift FIFO and Upsample FIFO in this case.
- The Rx FIFO acts both as a Phase Shift FIFO and Downsample FIFO in this case.
- This is a very common single-channel use case when the FPGA is unable to keep up with full-byte frequency.
- Two clock trees are required. These clock trees are driven by direct access of transmitting full-rate clock and transmit half-rate clock to the FPGA clock center mux. The full-rate clock tree drives the CTC FIFO read port and the Rx FIFO write port. The half-rate clock tree drives the Rx FIFO and the FPGA logic.

©2014-2023 Lattice Semiconductor Corp. All Lattice trademarks, registered trademarks, patents, and disclaimers are as listed at www.latticesemi.com/legal.
All other brand or product names are trademarks or registered trademarks of their respective holders. The specifications and information herein are subject to change without notice.

10.7. Case II_b: 16/20-bit, CTC FIFO Bypassed

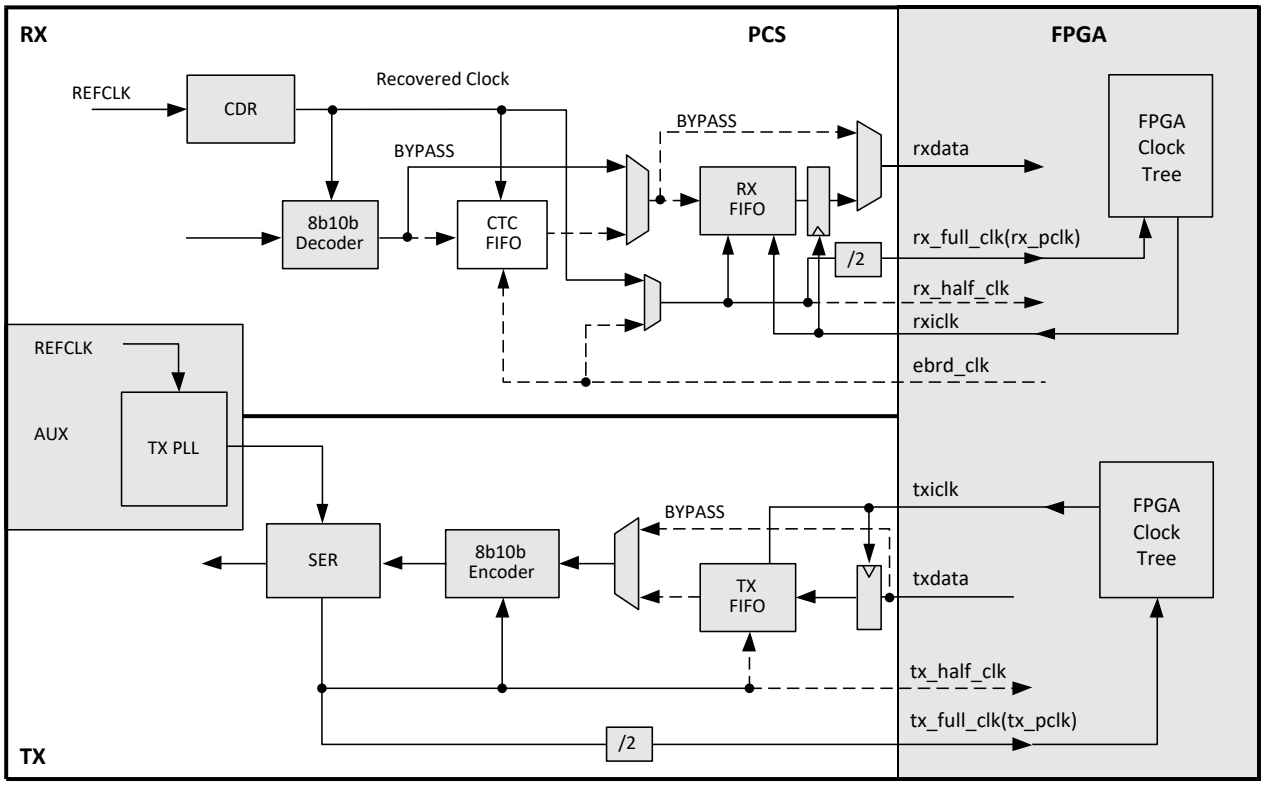

Figure 10.7. 16/20-Bit, CTC FIFO Bypassed

- The Tx FIFO acts both as a Phase Shift FIFO and Upsample FIFO in this case.
- The Rx FIFO is acting both as a Phase Shift FIFO and Downsample FIFO in this case.
- This is a very common multi-channel alignment use case when the FPGA is unable to keep up with full-byte frequency. The receive clock trees (up to four) can be local or global. They are running a half-rate clock. The transmit clock tree is driven by direct access of the transmit half-rate clock to the FPGA clock center mux.

©2014-2023 Lattice Semiconductor Corp. All Lattice trademarks, registered trademarks, patents, and disclaimers are as listed at www.latticesemi.com/legal.
All other brand or product names are trademarks or registered trademarks of their respective holders. The specifications and information herein are subject to change without notice.

11. SerDes/PCS Block Latency

Table 11.1 provides transmit and receive latencies, respectively, in the SerDes as well as different stages inside the PCS. The latency is in number of parallel word clocks.

Table 11.1. Transmit/Receive SerDes/PCS Latency

Item	Transmit Data Latencies[1]	Description	Min	Typ	Max	Exact	Byp	Unit
T1	FPGA Bridge	Gearing Disabled (with different clocks)	1	3	5	N/A	1	byte_clk
		Gearing Disabled (with same clocks)	N/A	N/A	N/A	3	1	byte_clk
		Gearing Enabled[2]	1	3	5	N/A	N/A	word_clk
T2	8b10b Encoder	—	N/A	N/A	N/A	2	1	byte_clk
T3	SerDes Bridge	—	N/A	N/A	N/A	2	1	byte_clk
T4	Serializer	x8 mode (BUS8BIT_SEL = 0)	N/A	N/A	N/A	15 + Δ1	N/A	UI + ps
		x10 mode (BUS8BIT_SEL = 1)	N/A	N/A	N/A	18 + Δ1	N/A	UI + ps
T5	Driver	De-emphasis ON	N/A	N/A	N/A	1 + Δ2	N/A	UI + ps
		Pre-emphasis OFF	N/A	N/A	N/A	0 + Δ3	N/A	UI + ps
Item	**Receive Data Latencies[2]**	**Description**	**Min**	**Typ**	**Max**	**Exact**	**Byp**	**Unit**
R1	Input Buffer	Equalization ON	N/A	N/A	N/A	Δ1	N/A	UI + ps
		Equalization OFF	N/A	N/A	N/A	Δ2	N/A	UI + ps
R2	Deserializer	x8 mode (BUS8BIT_SEL = 0)	N/A	N/A	N/A	10 + Δ3	N/A	UI + ps
		x10 mode (BUS8BIT_SEL = 1)	N/A	N/A	N/A	12 + Δ3	N/A	UI +ps
R3	SerDes Bridge	—	N/A	N/A	N/A	2	1	byte_clk
R4	Word Aligner[3]	—	N/A	N/A	N/A	4	0	byte_clk
R5	8B10B Decoder	—	N/A	N/A	N/A	1	1	byte_clk
R6	CTC	—	7	15	23	N/A	1	byte_clk
R7	FPGA Bridge	Gearing Disabled (with different clocks)	1	3	5	N/A	1	byte_clk
—	—	Gearing Disabled (with same clocks)	N/A	N/A	N/A	3	1	byte_clk
—	—	Gearing Enabled	1	3	5	N/A	N/A	word_clk

Notes:

1. Δ1 = -100 ps, Δ2 = +88 ps, Δ3 = +112 ps.
2. Δ1 = +118 ps, Δ2 = +132 ps, Δ3 = +721 ps.
3. Table 11.2 lists the word aligner latency depending on word alignment offset. The exact offset can be found in the channel status register.

Table 11.2. Word Aligner Latency versus Offset

wa_offset	Latency (Word Clocks)
0	4.0
1	3.9
2	3.8
3	3.7
4	3.6
5	3.5
6	3.4
7	3.3
8	3.2
9	3.1

©2014-2023 Lattice Semiconductor Corp. All Lattice trademarks, registered trademarks, patents, and disclaimers are as listed at www.latticesemi.com/legal.
All other brand or product names are trademarks or registered trademarks of their respective holders. The specifications and information herein are subject to change without notice.

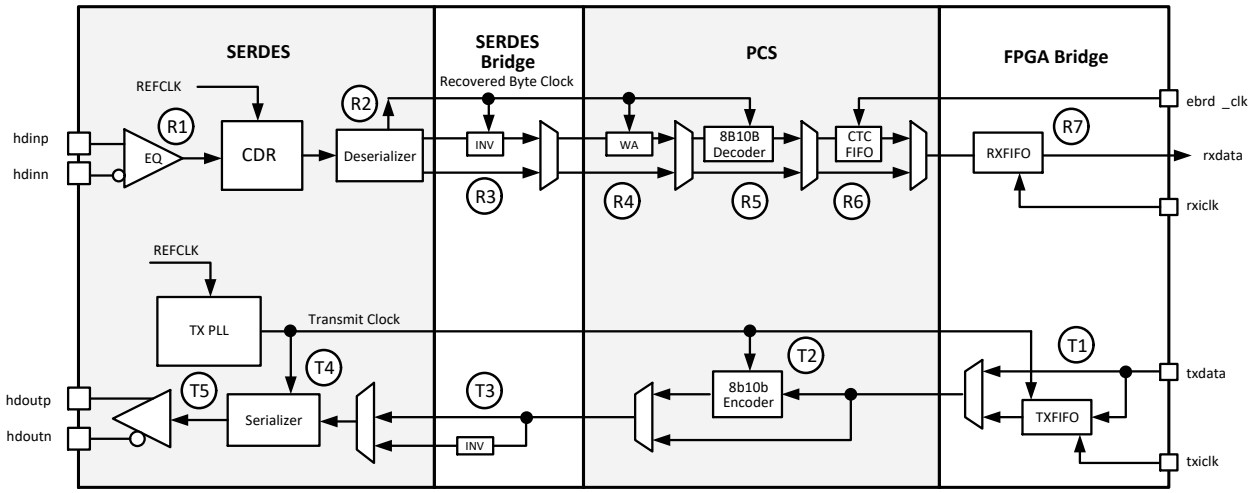

Figure 11.1. Transmitter and Receiver Latency Block Diagram

©2014-2023 Lattice Semiconductor Corp. All Lattice trademarks, registered trademarks, patents, and disclaimers are as listed at www.latticesemi.com/legal.
All other brand or product names are trademarks or registered trademarks of their respective holders. The specifications and information herein are subject to change without notice.

12. SerDes Client Interface

12.1. Introduction

LFE5UM/LFE5UM5G provides SCI interface to the core through general routing.

The settings in most of the configuration bits are shadowed into registers that can be read/write by the FPGA core. LFE5UM/LFE5UM5G provides the interface signals that can be controlled by the core. User logic can change these settings through your logic. You should be cautious when the settings are changed; and it is recommended, most of the time, to perform a reset to the SerDes and PCS in order to obtain the correct operation after the changes.

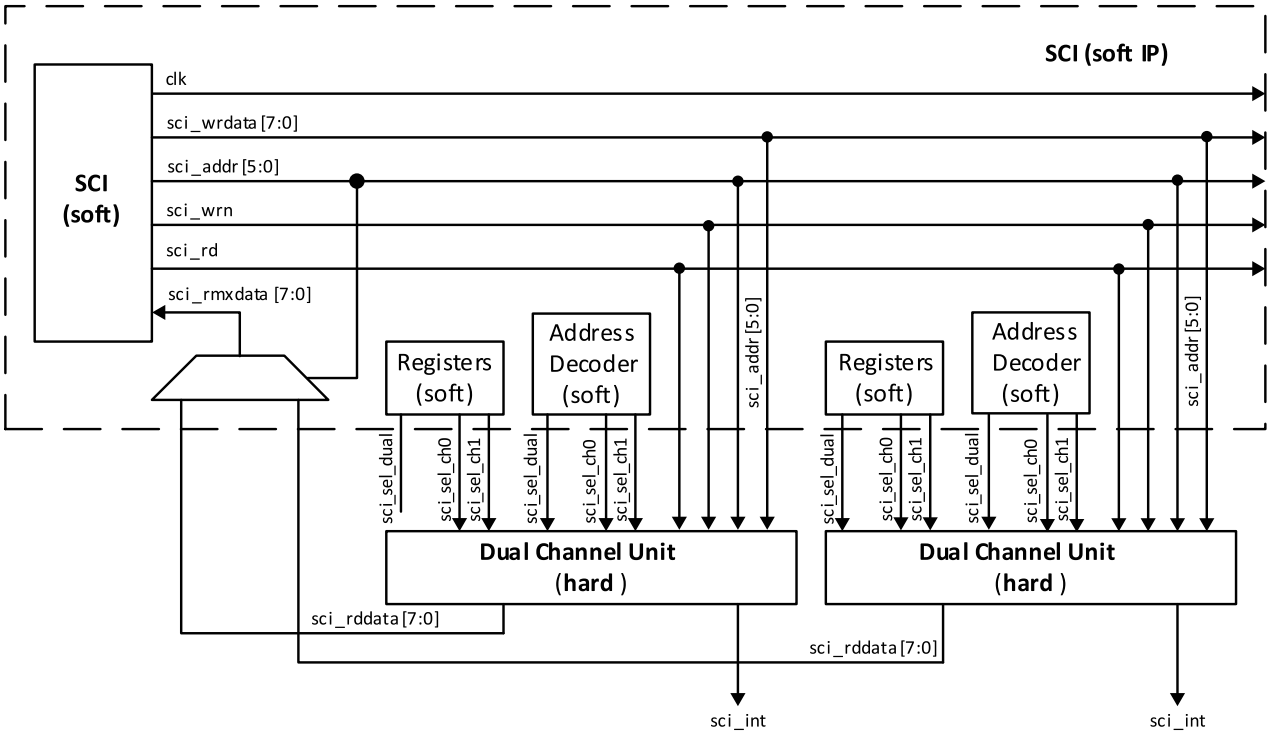

Figure 12.1. LFE5UM/LFE5UM5G SCI (SerDes Client Interface) Block Diagram

The SCI is an 8-bit asynchronous control interface to access the SerDes/PCS channels and TX PLL inside the DCU. The scisel lines are used to select a resource and then the sciwstn or sci_rd ports are used to latch in the command to write or read 8-bit data from sci_wrdata or to sci_rddata respectively. In addition, there is a sci_int port to allow an interrupt to be sent from any of the DCU resources to the FPGA. Refer to Table 12.1 for the port description.

Read and write operations through this interface are asynchronous. In the WRITE cycle, the write data and write address must be set up and held in relation to the falling edge of the SCI_WR. In the READ cycle, the timing has to be in relation to the SCI_RD pulse. Figure 12.2 and Figure 12.3 show the WRITE and READ cycles, respectively.

©2014-2023 Lattice Semiconductor Corp. All Lattice trademarks, registered trademarks, patents, and disclaimers are as listed at www.latticesemi.com/legal.
All other brand or product names are trademarks or registered trademarks of their respective holders. The specifications and information herein are subject to change without notice.

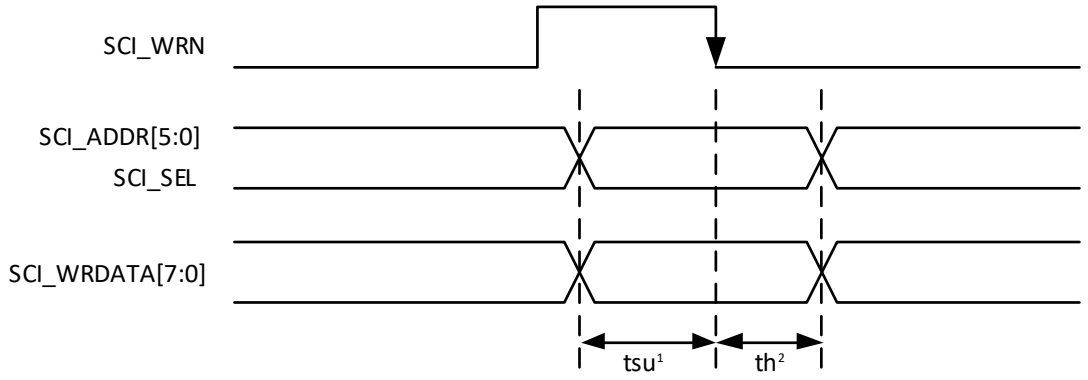

1. tsu is the setup time for address and write data prior to the falling edge of the write strobe.
2. th is the hold time for address and write data after the falling edge of the write strobe.

Note: To avoid accidental writing to control registers, registers should be used at the SCI input ports to drive them low at power-up reset.

Figure 12.2. SCI WRITE Cycle, Critical Timing

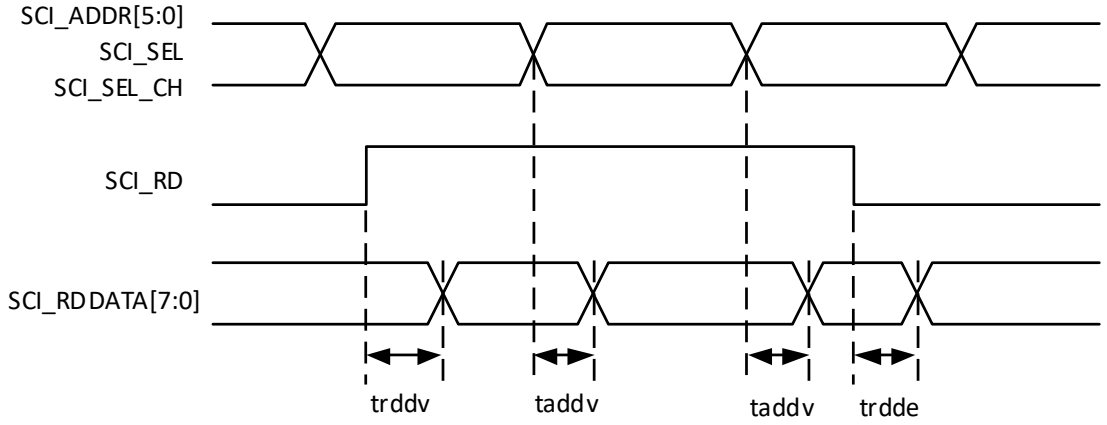

Figure 12.3. SCI READ Cycle, Critical Timing

Table 12.1. Timing Parameter

Parameter	Typical Value	Unit
tsu, trddv, taddv	1.1	ns
th, trdde	0.9	ns

The SCI interface is as simple as memory read/write. Here is an example of the pseudo code:

Write:

- Cycle 1: Set sci_addr[5:0], sciw_data[7:0], sci_sel = 1’b1
- Cycle 2: Set sci_wrn from 0 ≥ 1
- Cycle 3: Set sci_wrn from 1 ≥ 0, sci_sel = 1’b0

Read:

- Cycle 1: Set sci_addr[5:0], sci_sel = 1’b1
- Cycle 2: Set sci_rd from 0 ≥ 1
- Cycle 3: Obtain reading data from sci_rddata[7:0]
- Cycle 4: Set sci_rd from 1 ≥ 0

©2014-2023 Lattice Semiconductor Corp. All Lattice trademarks, registered trademarks, patents, and disclaimers are as listed at www.latticesemi.com/legal.
All other brand or product names are trademarks or registered trademarks of their respective holders. The specifications and information herein are subject to change without notice.

12.2. Interrupts and Status

The status bit may be read through the SCI, which is a byte-wide and thus reads the status of eight interrupt status signals at a time. The SCI_INT signal goes high to indicate that an interrupt event has occurred. You are required to read the DIF status register that indicates whether the interrupt came from the DCU or one of the channels. This register is not cleared on reading. It is cleared when all interrupt sources from the DCU or channel are cleared. Once the aggregated source of the interrupt is determined, you can read the registers in the associated DCU or channel to determine the source of the interrupt. Table 12.2 and Table 12.3 list all the sources of interruption.

Table 12.2. Dual Interrupt Sources

Dual SCI_INT Source	Description	Register Name
int_dl_out	Dual Interrupt. If there is an interrupt event anywhere in the dual, this register bit is active. This register bit is cleared when all interrupt events have been cleared.	PCS Dual Status Register DL_20
int_ch_out[1:0]	Channel Interrupt. If there is an interrupt event anywhere in the respective channel, this register bit is active. These register bits are cleared when all interrupt sources in the respective channel have been cleared.	PCS Dual Status Register DL_20
ls_sync_statusn[1:0]_int ls_sync_status[1:0]_int	Link Status Low (out of sync) channel interrupt & Link Status High (in sync) channel interrupt	PCS Dual Status Register DL_22_INT
~PLOL, PLOL	Interrupt generated on ~PLOL and PLOL–PLL Loss of Lock	PCS Dual Status Register DL_25

Table 12.3. Channel Interrupt Sources

Channel SCI_INT Source	Description	Register Name
fb_tx_fifo_error_int fb_rx_fifo_error_int cc_overrun_int cc_underrun_int	FPGA Bridge Tx FIFO Error Interrupt FPGA Bridge Rx FIFO Error Interrupt CTC FIF Overrun and Underrun Interrupts	PCS Channel General Interrupt Status Register CH_INT_23
pci_det_done_int rlos_lo_int ~rlos_lo_int rlol_int ~rlol_int	Interrupt generated for pci_det_done Interrupt generated for rlos_lo Interrupt generated for ~rlos_lo Interrupt generated for roll Interrupt generated for ~rlol	PCS Dual Status Register DL_INT_20

12.3. Dynamic Configuration of the SerDes/PCS Dual

The SerDes/PCS dual can be controlled by registers that are accessed through the optional SerDes Client Interface.

When controlled by the configuration memory cells, it is a requirement that the SerDes/PCS duals must reach a functional state after configuration is complete, without further intervention from you. This means that any special reset sequences that are required to initialize the SerDes/PCS dual must be handled automatically by the hardware. In other words, the use of the SCI is optional. The SerDes/PCS dual does NOT assume that the soft IP is present in the FPGA core.

©2014-2023 Lattice Semiconductor Corp. All Lattice trademarks, registered trademarks, patents, and disclaimers are as listed at www.latticesemi.com/legal.
All other brand or product names are trademarks or registered trademarks of their respective holders. The specifications and information herein are subject to change without notice.

13. SerDes Debug Capabilities

13.1. PCS Loopback Modes

The LFE5UM/LFE5UM5G family provides three loopback modes controlled by control signals at the PCS/FPGA interface for convenient testing of the external SerDes/board interface and the internal PCS/FPGA logic interface.

Rx-to-Tx Serial Loopback Mode

This mode loops serial receives data back onto the transmit buffer without passing through the CDR or deserializer. Select the Rx-to-Tx Serial Loopback option in the Clarity Designer (System Builder/Planner) user interface and SW sets the necessary control bits.

Tx-to-Rx Serial Loopback Mode

This mode loops back serial transmit data back onto the receiver CDR block. Select the TX-to-RX Serial Loopback option in the Clarity Designer (System Builder/Planner) user interface and SW sets the necessary control bits.

SerDes Parallel Loopback Mode

Loops parallel receive data back to the transmit data path without passing through the PCS logic. When disabled in the Clarity Designer (System Builder/Planner) user interface, the parallel loopback mode can be dynamically controlled from the FPGA core control signals sb_felb_c and sb_felb_rst_c. If the dynamic feature of this loopback mode is not used, the two control signals should be tied to the ground. When the loopback mode is enabled in the Clarity Designer (System Builder/Planner) user interface, the control register bit for the loopback mode is set. The control signals from the FPGA core, sb_felb_c and sb_felb_rst_c, are not available in the PCS module.

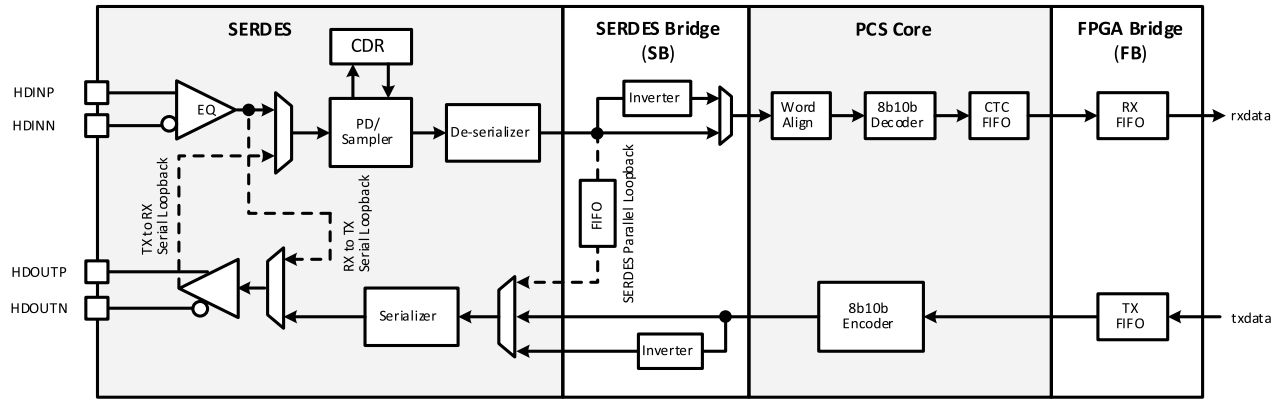

Figure 13.1. LFE5UM/LFE5UM5G SerDes Three Loopback Modes

13.2. ECO Editor

The Diamond ECO Editor supports all of the attributes of the primitives. The ECO Editor includes all settings that you see in the user interface tab, including pre-defined settings based on protocols.

ECO Editor is a graphical representation of all the user-configurable settings and allows you to change the settings in that environment. Care must be taken in making these changes because the changes are not checked by the design SW tools for correctness.

ECO Editor changes only settings inside the SerDes. Changes in the SerDes that would affect the external connection require you to re-run the SW flow. Changes made in ECO Editor that do not change external connection just require you to re-generate the bitstream with the same placement and routing done in the core.

Refer to the ECO Editor User Guide in Diamond for more information.

©2014-2023 Lattice Semiconductor Corp. All Lattice trademarks, registered trademarks, patents, and disclaimers are as listed at www.latticesemi.com/legal.
All other brand or product names are trademarks or registered trademarks of their respective holders. The specifications and information herein are subject to change without notice.

14. Other Design Considerations

14.1. Simulation of the SerDes/PCS

All SerDes/PCS simulation models are located in the installation directory, under ….\cae_library\simulation\blackbox directory

14.2. 16/20-Bit Word Alignment

The SerDes/PCS recognizes the byte boundary by aligning to COMMA characters, but the PCS receiver cannot recognize the 16-bit word boundary. When Word Aligner is enabled, the PCS can only do BYTE alignment. The 16-bit word alignment should be done in the FPGA fabric and is fairly straightforward. The simulation model works in the same way. It can be enhanced if you implement an alignment scheme as described below.

For example, if transmit data at the FPGA interface are: `YZABCDEFGHIJKLM... (each letter is a byte, 8-bit or 10-bit)` Then the incoming data in PCS after 8b10b decoder and before rx_gearbox are: `YZABCDEFGHIJKLM...`

After rx_gearbox, they can become:

1. ZY}{BA}{DC}{FE}{HG}{JI}{LK}....

or

2. AZ}{CB}{ED}{GF}{IH}{KJ}{ML}...

Clearly, sequence 2 is not aligned. It has one-byte offset, but 16/20-bit alignment is needed. Let us say the special character ‘A’ should be always placed in the lower byte.

Flopping one 20-bit data combines with the current 16/20-bit data to form 32/40-bit data as shown below:

```
1. {DCBA}{HGFE}{LKJI}...
            ^
            | **Found the A in lower 10-bit, set the offset to ‘0’, send out aligned data ‘BA’
      Next clock cycle:
      {FEDC}{JIHG}{NMLK}...
             ^
              | **send out aligned data ‘DC’
      etc.
      After the 16/20-bit alignment, the output data are:
           {ZY}{BA}{DC}{FE}{HG}{JI}{LK}...
2. {CBAZ}{GFED}{KJIH}....
           ^
           | **Found the A in upper 10-bit, set the offset to ‘10’, send out aligned data ‘BA’
       Next clock cycle:
           {EDCB}{IHGF}{MLKJ}...
             ^
             | **send out aligned data ‘DC’
      etc.
      After the 20-bit alignment, the output data are:
           {ZY}{BA}{DC}{FE}{HG}{JI}{LK}...
```

Note: The LSB of a 8/10-bit byte or a 16/20-bit word is always transmitted first and received first.

©2014-2023 Lattice Semiconductor Corp. All Lattice trademarks, registered trademarks, patents, and disclaimers are as listed at www.latticesemi.com/legal.
All other brand or product names are trademarks or registered trademarks of their respective holders. The specifications and information herein are subject to change without notice.

14.2.1. Unused Dual/Channel and Power Supply

On unused dual and channels, VCCA should be powered up. VCCHRX, VCCHTX, HDINP/N, HDOUTP/N and REF-CLKP/N should be left floating. Unused channel outputs are tri-stated, with approximately 10 kΩ internal resistor connecting between the differential output pair. During configuration, HDOUTP/N are pulled high to VCCHTX.

Even when a channel is used as *Rx Only* mode or *Tx Only* mode, both the VCCHTX and VCCHRX of the channel must be powered up. Unused SerDes are configured in power-down mode by default.

©2014-2023 Lattice Semiconductor Corp. All Lattice trademarks, registered trademarks, patents, and disclaimers are as listed at www.latticesemi.com/legal.
All other brand or product names are trademarks or registered trademarks of their respective holders. The specifications and information herein are subject to change without notice.

15. SerDes/PCS Reset

Reset and Power-Down Control

The SerDes dual has reset and power-down controls for the entire macro and also for each transmitter and receiver as shown in Figure 15.1. The reset signals are active high and the power-down is achieved by driving the pwrup signals low. The operation of the various reset and power-down controls are described in the following sections.

Note: When the device is powering up and the chip level power-on-reset is active, the SerDes control bits (in the PCS) are cleared (or take on their default value). This puts the SerDes DCU into the power-down state.

After configuration is complete, the whole device, including the SerDes/PCS duals, reaches a functional state without further intervention from you. The reset sequence to initialize the dual is handled by the hardware.

15.1. Reset and Power-Down Control

The SerDes dual has reset and power-down controls for the whole macro as well as individual reset and power down controls for each transmitter and receiver as shown in Figure 15.1. The reset signals are active high and the power-down signals are active low. The operation of the various reset and power-down controls are described in following sections.

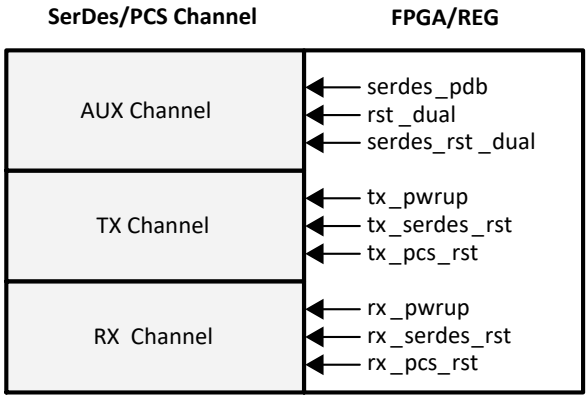

Figure 15.1. Reset and Power-Down Control

15.2. Reset Generation

Reset generation and distribution are handled by the clocks and the resets block. The internal reset signal for all blocks within the PCS is active low with an asynchronous assert and a synchronous de-assert. The reset logic is shown in Figure 15.2 and the corresponding table is Table 15.1.

©2014-2023 Lattice Semiconductor Corp. All Lattice trademarks, registered trademarks, patents, and disclaimers are as listed at www.latticesemi.com/legal.
All other brand or product names are trademarks or registered trademarks of their respective holders. The specifications and information herein are subject to change without notice.

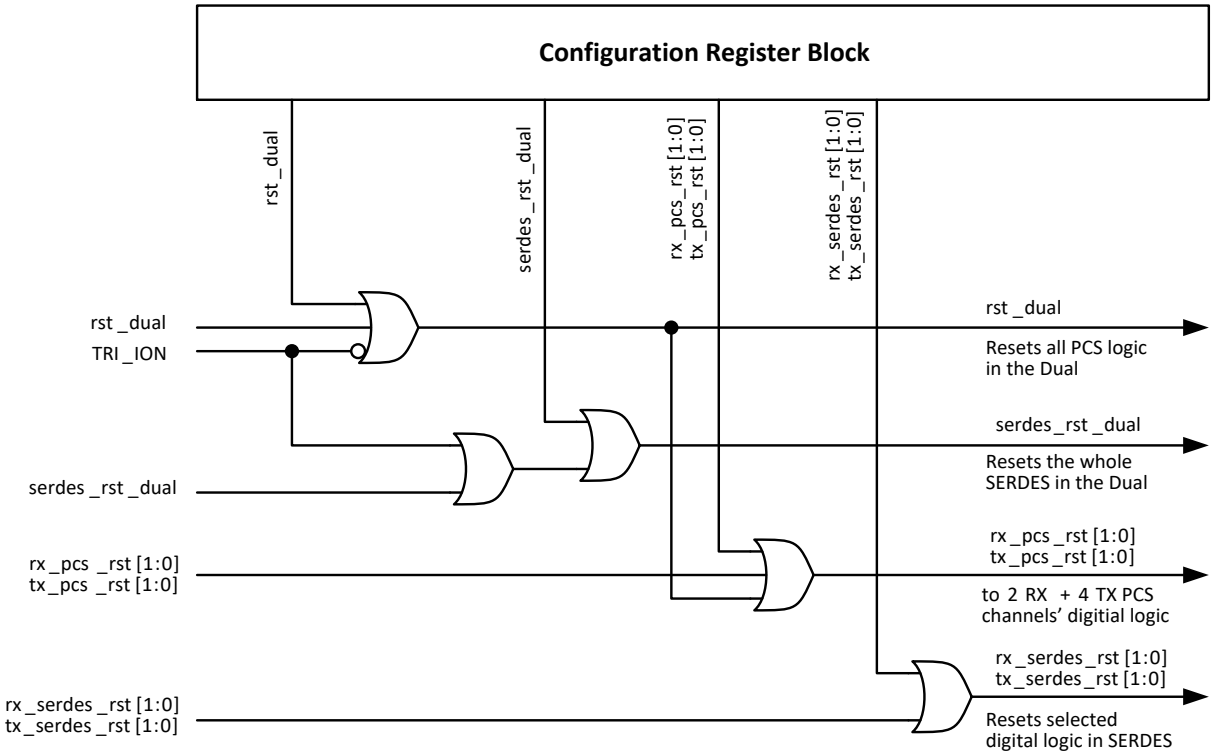

Figure 15.2. Global Reset Diagram

Note in Figure 15.2, each of the reset signal controlled by the FPGA logic has a corresponding register bit. These register bits can be accessed through the SCI interface, and you can write *1* to the register to activate the reset, and write *0* to release it.

Table 15.1 describes the part of SerDes/PCS that are affected by the different resets.

Table 15.1. Reset Table

Reset Signal	PCS TX	PCS RX	SerDes TX	SerDes RX	TX PLL	PLOL	RX CDR	CONTROL REGs
tx_pcs_rst[1:0] (fpga)	x	—	—	—	—	—	—	—
tx_pcs_rst[1:0] (register)	x	—	—	—	—	—	—	—
rx_pcs_rst[1:0] (fpga)	—	x	—	—	—	—	—	—
rx_pcs_rst[1:0] (register)	—	x	—	—	—	—	—	—
rst_dual (fpga)	x	x	—	—	—	—	—	—
rst_dual (register)	x	x	—	—	—	—	—	—
serdes_rst_dual (fpga)	—	—	x	x	x	x	x	—
serdes_rst_dual (register)	—	—	x	x	x	x	x	—
rx_serdes_rst[1:0] (fpga)	—	—	—	x	—	—	x	—
rx_serdes_rst [1:0] (register)	—	—	—	x	—	—	x	—
tx_serdes_rst (fpga)	—	—	x	—	x	x	—	—
tx_serdes_rst (register)	—	—	x	—	x	x	—	—

©2014-2023 Lattice Semiconductor Corp. All Lattice trademarks, registered trademarks, patents, and disclaimers are as listed at www.latticesemi.com/legal.
All other brand or product names are trademarks or registered trademarks of their respective holders. The specifications and information herein are subject to change without notice.

Table 15.2 describes the power down signals.

Table 15.2. Power-Down Control Description

Signal		Description
FPGA	Register	
serdes_pd		Active-low asynchronous input to the SerDes DCU, acts on all channels including the auxiliary channel. When driven low, it powers down the whole macro including the transmit PLL. All clocks are stopped and the macro power dissipation is minimized. After release, both the TX and RX reset sequences should be followed.
tx_pwrup_ch[0:3]_c	tpwrup[0:3]	Active-high transmit channel power-up – Powers up the serializer and output driver. After release, the TX reset sequence should be followed.
rx_pwrup_ch[0:3]_c	rpwrup[0:3]	Active-high receive channel power-up – Powers up CDR, input buffer (equalizer and amplifier) and loss-of-signal detector. After release, the RX reset sequence should be followed.

Table 15.3. Power-Down/Power-Up Timing Specification

Parameter	Description	Min	Typ	Max	Units
t_{PWRDN}	Power-down time after serdes_pd	20	—	—	ns
t_{PWRUP}	Power-up time after serdes_pd	20	—	—	ns

15.3. Reset Sequence

There are many different reasons users may want to assert a reset, but there are times when he wants to only reset one channel or just the Rx or Tx alone. The different resets provide a lot of flexibility for you. This is especially important considering if the link shows only Rx issue, he does not have to reset the Tx channel, in order to maintain connection to the far end, or vice versa. Also, it is important that when a Dual is connected to two different links, clearing one Tx channel should keep the other channel running. Since two Tx channels in the Dual is sharing the same TxPLL, and if TxPLL is not the source of problem, then you do not need to reset everything associated with the channel he wants to re-initialize.

However, you have to maintain proper sequencing between PCS and SerDes and sometimes PLL/CDR so that the three blocks are properly synchronized. The proper sequence should involve:

1. PLL needs to be locked first. This goes with TxPLL and CDR PLL. In the case of both are being reset, CDR PLL should wait for TxPLL lock before it releases the reset on it to start to clock on the CDR.
2. Once the PLLs are locked, the SerDes reset should be released. This properly generates the byte clock that synchronizes to the bit clock inside the SerDes.
3. Last to be released is the PCS reset, where all the user logic.

Clarity Designer in the Diamond Design Software provides an option for you to select a Reset Sequence Logic module, implemented in the FPGA logic, to synchronize the resets above, so that all three blocks: PCS, SerDes, and PLL/CDR, operate correctly. This option can be found in the **Control Setup** tab of the PCS module in Clarity Designer, as shown in Figure 15.3.

©2014-2023 Lattice Semiconductor Corp. All Lattice trademarks, registered trademarks, patents, and disclaimers are as listed at www.latticesemi.com/legal.
All other brand or product names are trademarks or registered trademarks of their respective holders. The specifications and information herein are subject to change without notice.

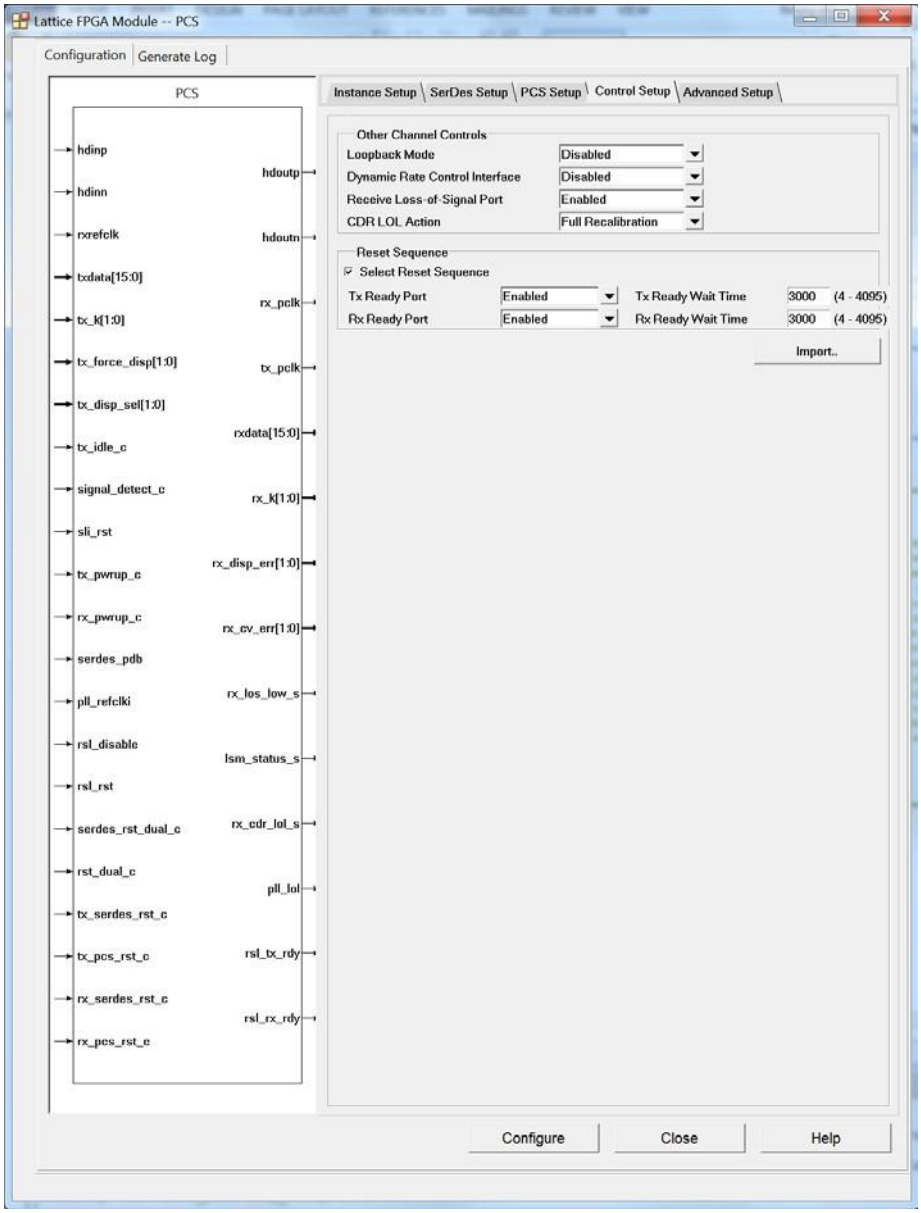

Figure 15.3. Reset Sequence in Clarity Design, PCS Module

The **Reset Sequence Logic** module is selected by default. Two additional ports are added to the PCS module: rsl_disable and rsl_rst. Rsl_rst resets all the logic in the module, and rsl_disable is used to de-assert all outputs in the Reset Sequence Logic module.

Also by default, both rsl_tx_rdy and rsl_rx_rdy ports are not enabled. These ports can be enabled to allow user logic to monitor the state of the PCS channels. The option of the wait time is used to delay these signals to be active, to filter out any event that can cause these signals to toggle while the TxPLL and Rx CDR get locked.

The Reset Sequence Logic block diagram is shown in Figure 15.4.

©2014-2023 Lattice Semiconductor Corp. All Lattice trademarks, registered trademarks, patents, and disclaimers are as listed at www.latticesemi.com/legal.
All other brand or product names are trademarks or registered trademarks of their respective holders. The specifications and information herein are subject to change without notice.

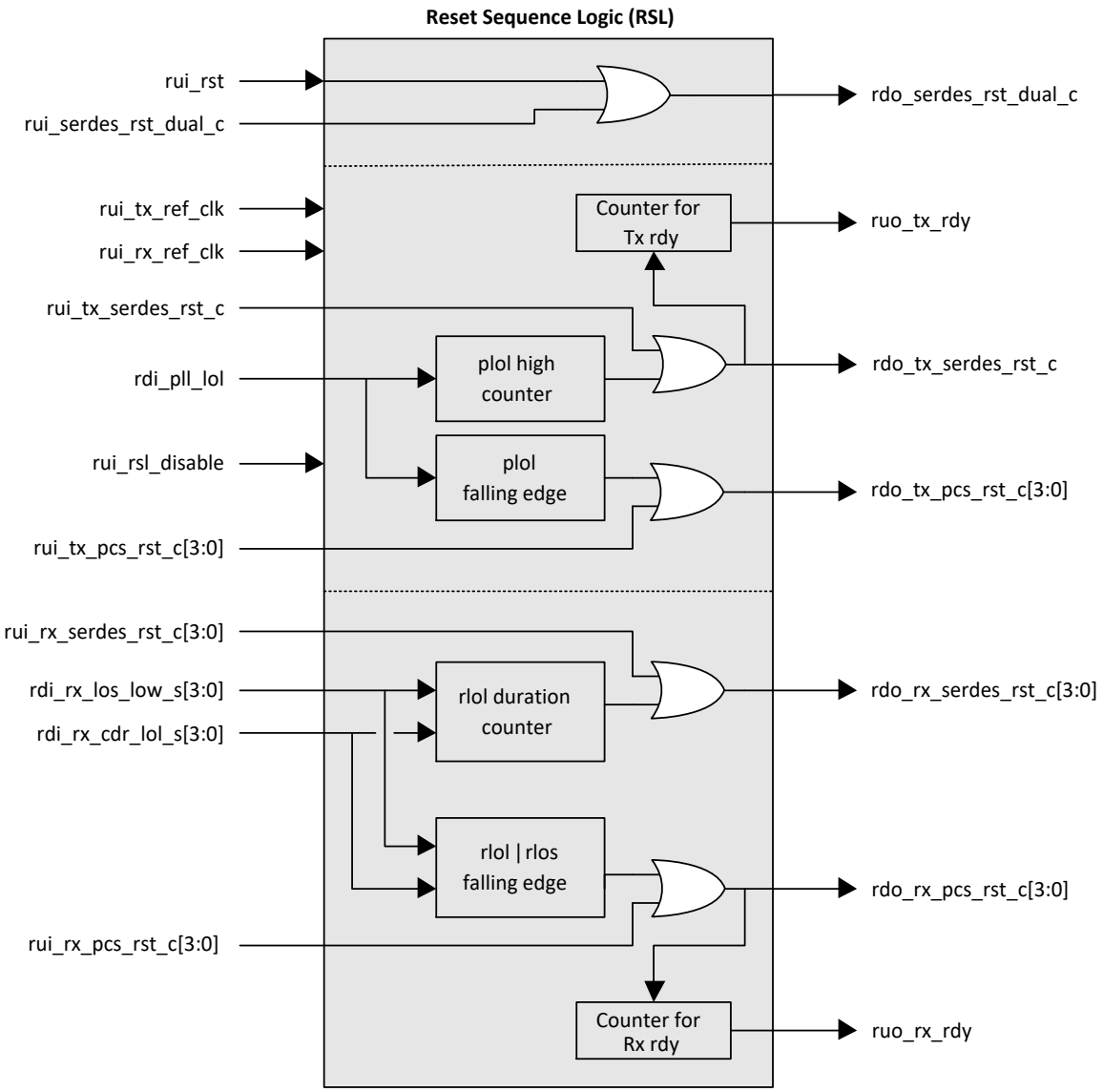

Figure 15.4. Reset Sequence Logic (RSL) Block Diagram

This block can be seen in RTL code generated by the Clarity Design in Diamond Design Software.

Clarity Design treats each user interface as one instance, and only one RSL is created per instance. When an instance is multi-channel, the RSL needs to control channels within one DCU, or channels across multiple DCUs. When two single-channel instances are created with RSL in each, and they are placed in the same DCU (example: Two PCIe X1 instances in one DCU), these two RSLs need to be merged to control one DCU. These are described in following sections:

Connectivity for Single-Channel RSL

The connectivity of one channel RSL to one DCU channel is shown in Figure 15.5. The port name prefixes for RSL block uses the following convention:

- rdi: RSL inputs ports that are driven by DCU outputs (including those merged by SW OR gate)
- rui: RSL inputs coming from the user
- rdo: RSL outputs driving DCU inputs
- ruo: RSL outputs going out to user logic

©2014-2023 Lattice Semiconductor Corp. All Lattice trademarks, registered trademarks, patents, and disclaimers are as listed at www.latticesemi.com/legal.
All other brand or product names are trademarks or registered trademarks of their respective holders. The specifications and information herein are subject to change without notice.

Except for the above prefix, the RSL port names mostly match the corresponding DCU port names as assigned by the ASB Generator wrapper. The ports highlighted in green are common for both channels of the DCU and are to be merged by SW when two channels are packed into a DCU. Note that the RSL is positioned as an add-on to the existing PCS wrapper and hence the currently used PCS wrapper signal names are used instead of DCU primitive names.

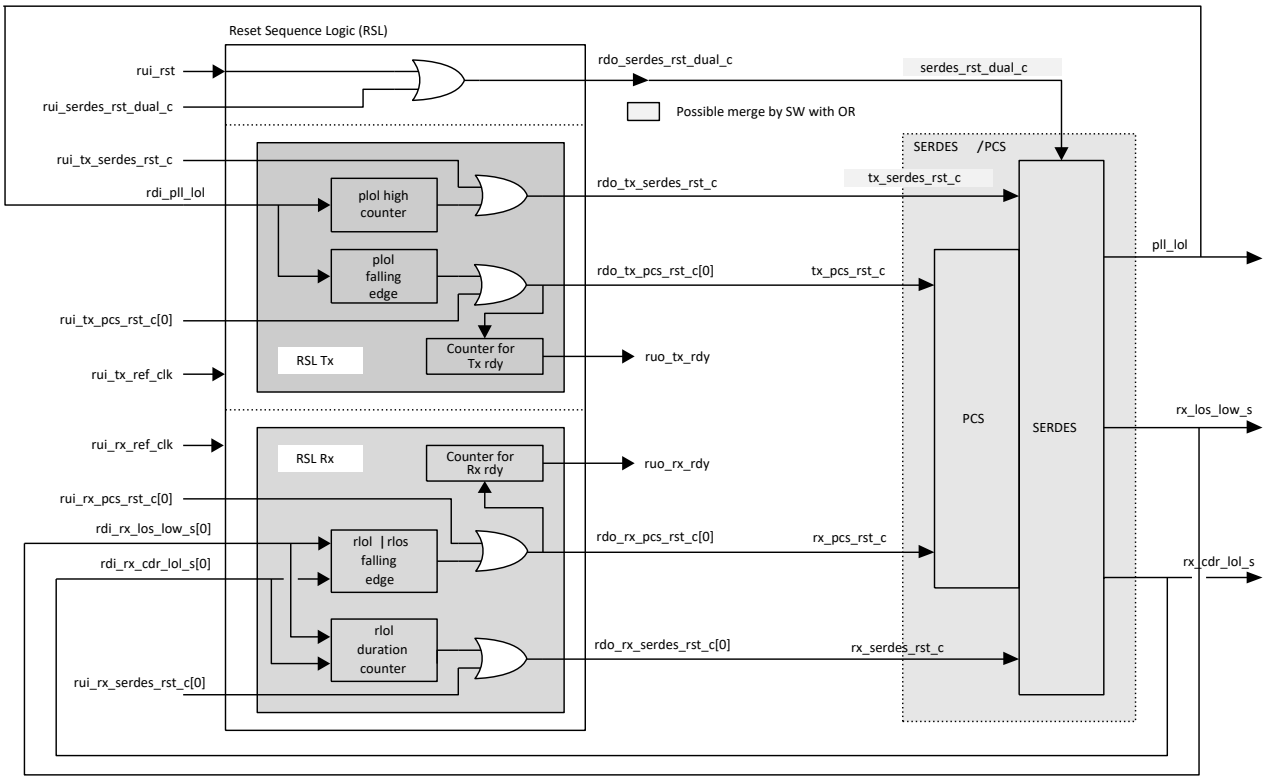

Figure 15.5. RSL Connectivity to Single-Channel in One DCU

The example in Figure 15.5 shows Channel 0 is used in the DCU, and Channel 1 is not used. If channel 1 is also used for another instance, the RSL in Channel 1 needs to be merged with Channel 0, as described in later section.

Connectivity for Multiple-Channel RSL

The logic used to generate the reset commands is the same as used in Single-Channel RSL, as shown in Figure 15.6. The status outputs (LOL, LOS signals) from multiple channels are OR'ed together before applying to the RSL. The user override reset command for each channel is OR'ed with the reset command from the generation logic to drive the reset inputs of each channel.

The content and connectivity for 4-channel RSL is similar to the 2-channel case shown in Figure 15.6, except that there are four user override reset commands, one for each channel. There are four sets of reset signals to the four channels of the DCUs (2 DCU primitives are used for creating a 4-channel wrapper). There is an important difference to be noted in the way 4-channel PCS is generated. The 2-channel PCS wrapper brings out command and status ports consistent to the 2-channel DCU pin-outs, but the 4-channel wrapper does it differently. For 4-channel PCS wrapper, there is only one pll_lol output brought out even though there are 2 different outputs from each of the DCU primitives. Similarly, there is only one serdes_rst_dual_c input and one tx_serdes_rst_c input into the wrapper, even though there are two of those inputs available for each of the DCUs in the wrapper. In short the 4-channel PCS wrapper has common Tx status and controls for both the DCU instances in it. These ports are connected to the status/control ports of DCU0 instance. The RSL content and connectivity are designed to match with this behavior of the Diamond PCS wrapper.

©2014-2023 Lattice Semiconductor Corp. All Lattice trademarks, registered trademarks, patents, and disclaimers are as listed at www.latticesemi.com/legal.
All other brand or product names are trademarks or registered trademarks of their respective holders. The specifications and information herein are subject to change without notice.

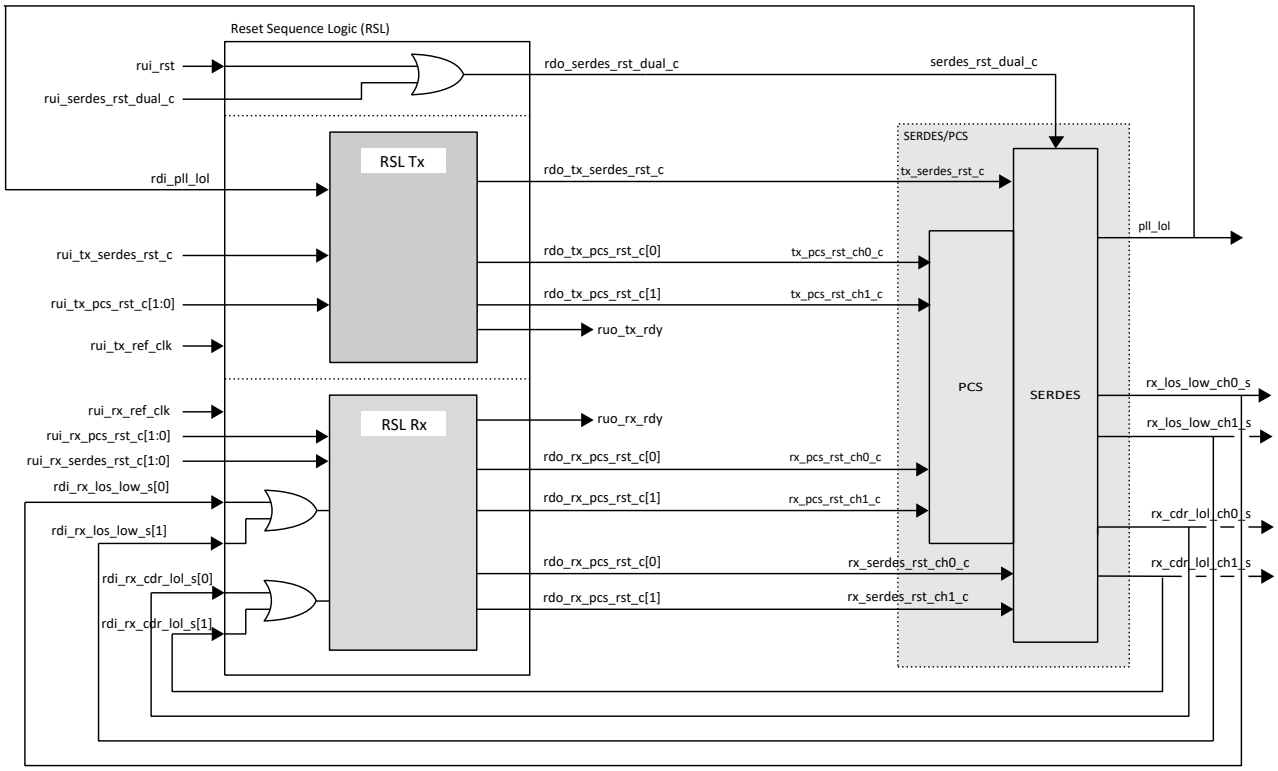

Figure 15.6. Connectivity of 2-Channel RSL in 2-Channel DCU

Connectivity of Multiple Instance in a DCU

When two Single-Channel instances are created in Clarity Designer, and they are placed into the same DCU, the SW needs to merge the common output signals using an OR gate between the two RSLs, as shown in Figure 15.7.

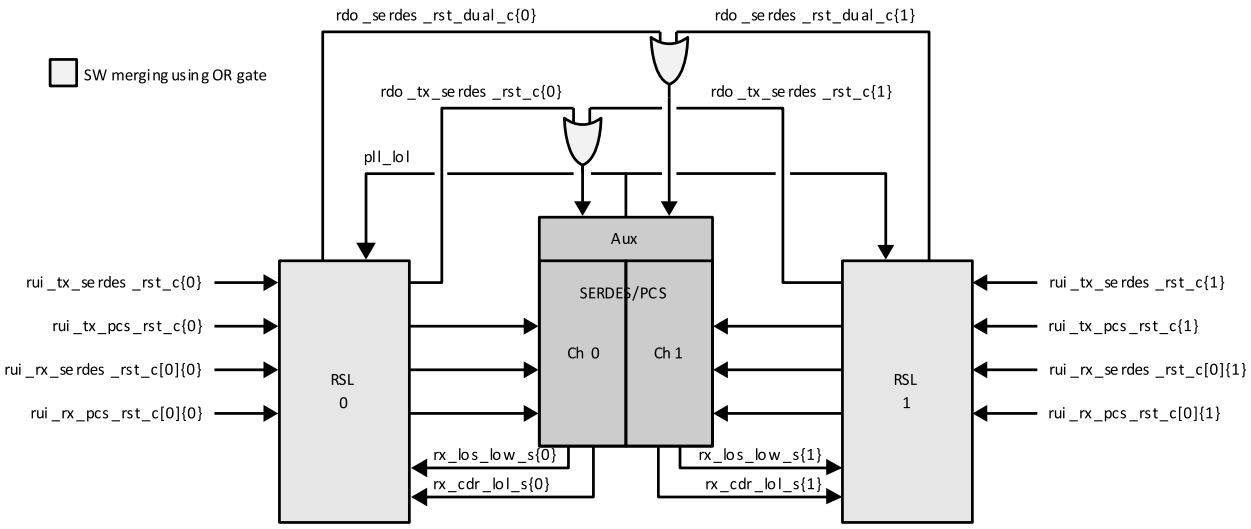

Figure 15.7. Merging Two Single-Channel PCS Modules with RSL Included

©2014-2023 Lattice Semiconductor Corp. All Lattice trademarks, registered trademarks, patents, and disclaimers are as listed at www.latticesemi.com/legal.
All other brand or product names are trademarks or registered trademarks of their respective holders. The specifications and information herein are subject to change without notice.

Figure 15.7 shows the indices inside the curly braces that are used to identify signals out of different Single-Channels PCS modules. The SW merge rules for connecting individual channel-based signals to common dual signals are as follows:

- The status output from SerDes, pll_lol (ffs_plol) is connected to each of the channel's input port rdi_pll_lol.
- The macro reset command output from each of the channel's RSL (rdo_serdes_rst_dual_c) is ORed by the SW and connected to the serdes_rst_dual_c (ffc_macro_rst) input of the SerDes/PCS block.
- The SerDes transmit reset command output from each of the channel's RSL (rdo_tx_serdes_rst_c) is ORed by the SW and connected to the tx_serdes_rst_c (trst) input of the SerDes/PCS block.
- SW merges the common dual signals (D_FFC_DUAL_RST, D_FFC_MACRO_RST, D_FFC_TRST, D_SCAN_RESET) based on the port name in DCUA primitive. All the drivers to each of the above-named ports are ORed together and connected to that port.

Note that when two Single-Channel instances are connected to the same DCU, any event that would cause one instance to reset the DCU would also reset the other instance. This is because the two instances placed within one DCU share the TXPLL in the DCU, and resetting the TXPLL by one instance would reset both instances at the same time.

©2014-2023 Lattice Semiconductor Corp. All Lattice trademarks, registered trademarks, patents, and disclaimers are as listed at www.latticesemi.com/legal.
All other brand or product names are trademarks or registered trademarks of their respective holders. The specifications and information herein are subject to change without notice.

16. Clarity Designer (System Builder/Planner) Overview

The Clarity Designer (System Builder/Planner) is an embedded tool in the Diamond Software. With the Clarity Designer tool, you can specify the full function of the link he wants to implement. This includes SerDes channels, the PCS, the reference clock, and the IP and/or wrapper.

Diamond Overview

For LFE5UM/LFE5UM5G device family following primitive names are used.

DCU -> DCUA

EXTREF -> EXTREFB

SerDes/PCS HW is composed of three functional blocks, as shown in Figure 7.5. Because the functional block TXPLL has limited sharing, it implemented as part of the SerDes/PCS tab in the user interface.

D0CH0: DCU0 Channel0

D0EXTREF: DCU0 EXTREF

16.1. Top Level Block Diagram

This section describes the usage of three blocks, SerDes/PCS channel, TXPLL, and EXTREF. A top-level diagram in Figure 16.1 shows how the three blocks are integrated.

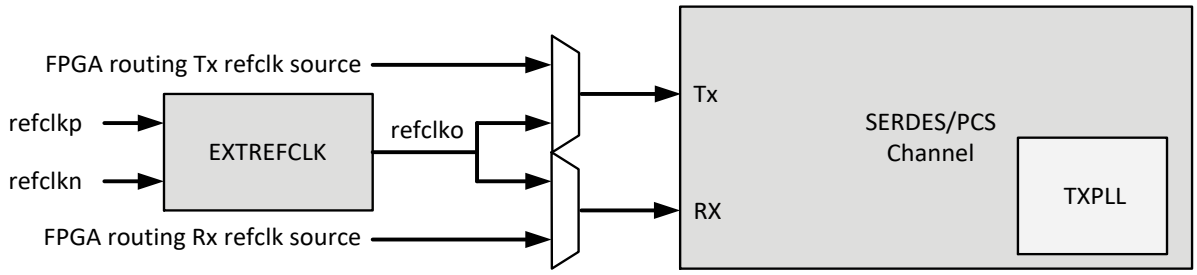

Figure 16.1. Three Components Connectivity (for 1-Lane Link)

SerDes/PCS Channel

The SerDes physical channel and its corresponding PCS block are combined into single SerDes/PCS channel block, and multiple channels can be instantiated together as one instance, serving as multi-lane link. When a soft IP is included as part of the instance in the Clarity Designer (System Builder/Planner), Diamond software routes the connection signals from SerDes/PCS to/from the soft IP as defined in the IP.

Refer to Figure 7.5 for the SerDes/PCS channel primitive and Table 7.4 signal description.

TXPLL

This block is embedded into SerDes/PCS user interface tab but is captured as a separate primitive because the output of the PLL can be shared and used in SerDes/PCS channels outside of its own DCU.

EXTREF

This is the input buffer block for the reference clock input. PLLs connects to this buffer element when external reference clock source is used.

Single-ended reference clock function is supported, with proper settings of termination resistor and DC bias on the pins. Refer to Lattice technical note, Electrical Recommendations for Lattice SerDes (FPGA-TN-02077) for example circuits.

Connectivity: Captured by SW to provide the implicit connections that you define. The routing of this is transparent to you. You have to make the connections in the Clarity Designer (System Builder/Planner).

Clock routing: This is a dual based routing block that is captured in the SW. This block connects all the clocking signals in the SerDes/PCS.

©2014-2023 Lattice Semiconductor Corp. All Lattice trademarks, registered trademarks, patents, and disclaimers are as listed at www.latticesemi.com/legal.
All other brand or product names are trademarks or registered trademarks of their respective holders. The specifications and information herein are subject to change without notice.

17. SerDes/PCS Generation in Clarity Designer (System Builder/Planner)

Clarity Designer (Clarity) is a new tool that targets to provide a more integrated module/function generator environment to you.

The Clarity allows you to design the functional block from the top level, pulling in all the necessary modules from the top, then goes into each module to customize what he needs. It is a top-down approach that allows you to look at your design as a functional block that he can simulate and place in the device. An example of this is a PCIe controller, where you use the PCIe IP, the PIPE interface, and the SerDes/PCS blocks.

Once the blocks are identified, you can push into the user interface of the block, which has similar interface of customizing SerDes on ECP3.

Figure 17.1 shows the view of Clarity when it is opened in Diamond.

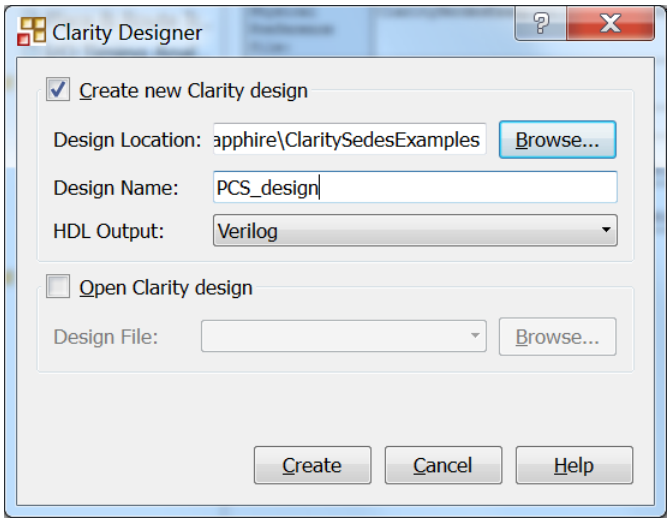

Figure 17.1. Clarity Designer Tool

The Clarity opens the project in the project directory specifies in the path.

Once the project is created, a list of modules is shown in the catalog, see Figure 17.2.

©2014-2023 Lattice Semiconductor Corp. All Lattice trademarks, registered trademarks, patents, and disclaimers are as listed at www.latticesemi.com/legal.
All other brand or product names are trademarks or registered trademarks of their respective holders. The specifications and information herein are subject to change without notice.

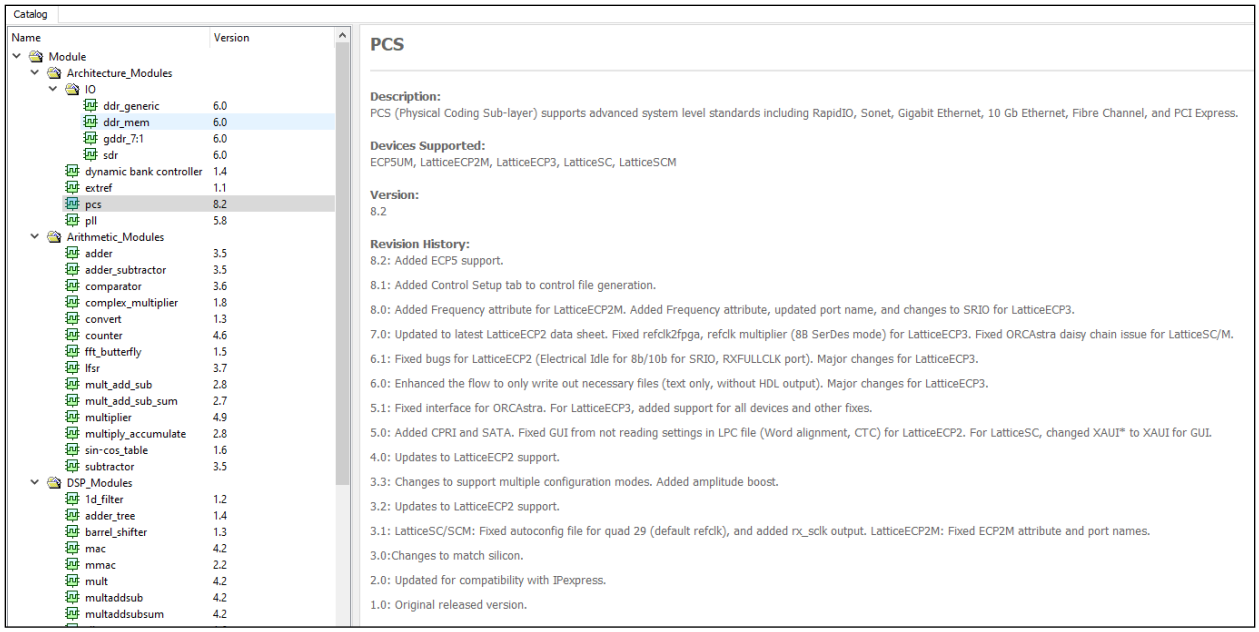

Figure 17.2. Clarity Designer Catalog

When PCS is selected, a menu opens up to specify the details of the module to be created.

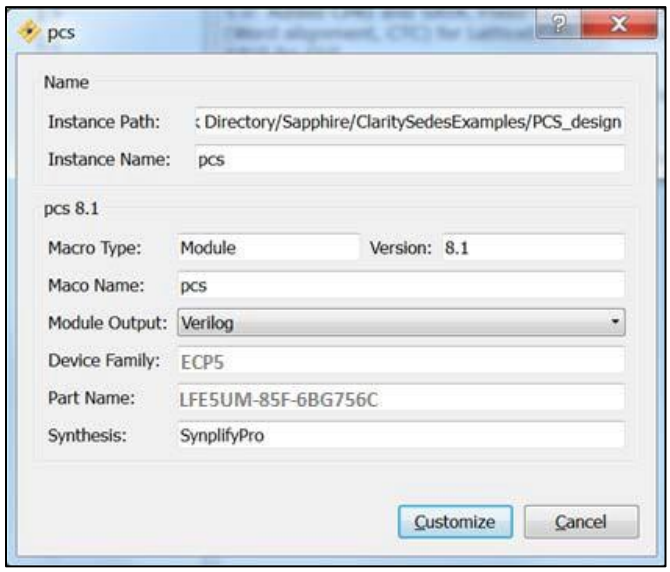

Figure 17.3. PCS Module in Clarity Designer

After all the information is filled in, the Custom button brings up the user interface for all the settings of that instance. The first tab is shown in Figure 17.4.

©2014-2023 Lattice Semiconductor Corp. All Lattice trademarks, registered trademarks, patents, and disclaimers are as listed at www.latticesemi.com/legal.
All other brand or product names are trademarks or registered trademarks of their respective holders. The specifications and information herein are subject to change without notice.

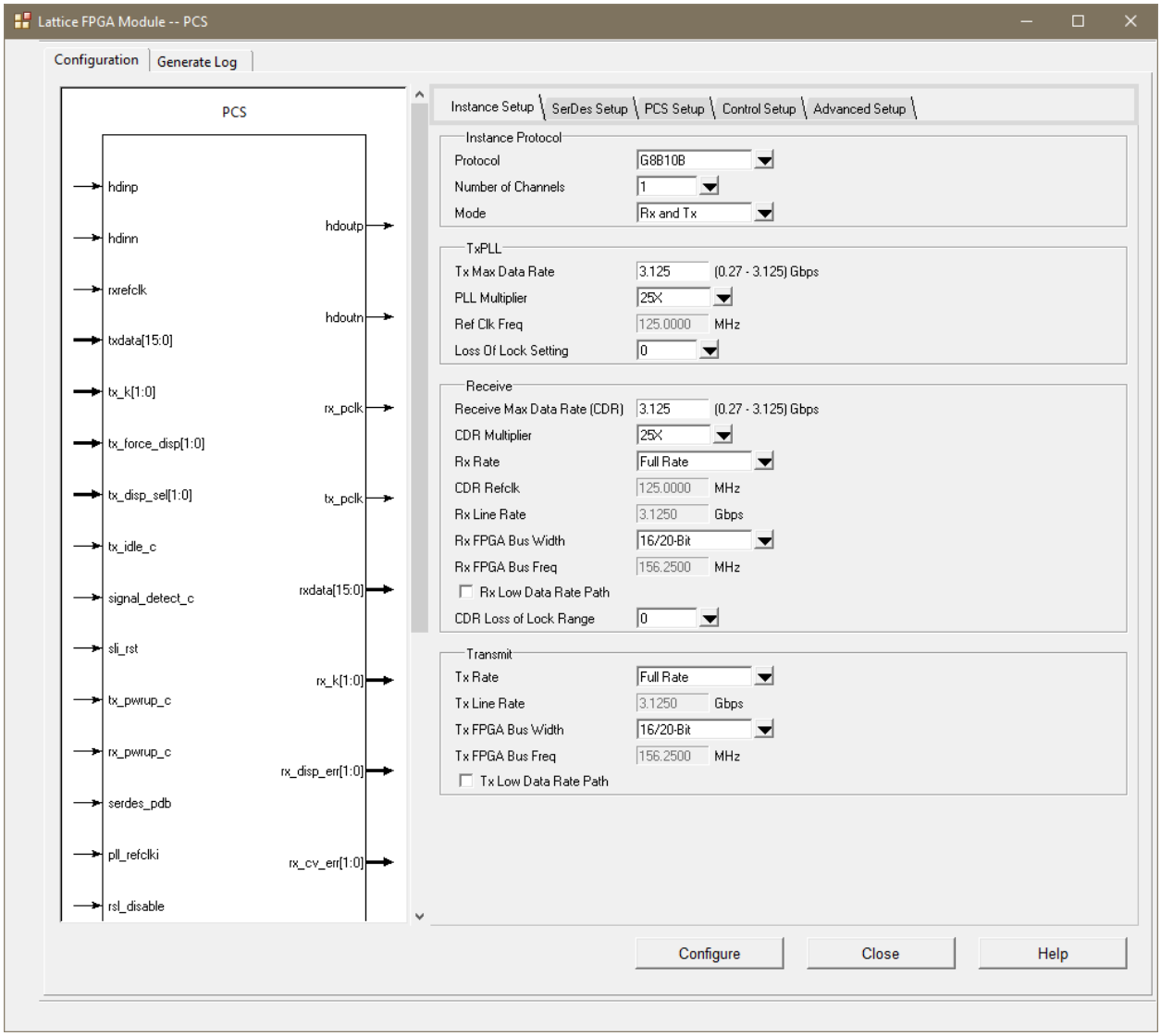

Figure 17.4. Instance Setup Tab

Table 17.1. Instance Setup Tab Description

User Interface Text	Attribute Names	Values	Default Value
Number of Channels	NUM_CHS	1, 2, 4	1
Protocol	PROTOCOL	See Protocol Table below	G8B10B
Mode	CH_MODE	Rx and Tx, Rx Only, Tx, Only	Rx and Tx
Rx Low Data Rate	RXLDR	On/Off	Off
Tx Low Data Rate	TXLDR	On/Off	Off
Tx Max Data Rate	TX_MAX_RATE	0.27–3.125/5.0[1]	3.125
PLL Multiplier	TXPLLMULT	8X, 10X, 16X, 20X, 25X	25X
Ref Clk Freq	REFCLK_RATE	27–312.5	Calculated[2]
CDR Loss of Lock Range	CDRLOLRANGE	0–3	0
TxPLL Loss Of Lock Setting	TXPLLLOLTHRESHOLD	0–3	0
Tx Rate Divider	TX _RATE_DIV	Full Rate, Div2 Rate, Div11	Full Rate
Tx Line Rate	TX_LINE_RATE	135 Mb/s – 3.125/5.0[1] Gb/s	3.1250 Gb/s
Receive Max Data Rate (CDR)	CDR_MAX_RATE	0.27–3.125/5.0[1]	3.125

©2014-2023 Lattice Semiconductor Corp. All Lattice trademarks, registered trademarks, patents, and disclaimers are as listed at www.latticesemi.com/legal.
All other brand or product names are trademarks or registered trademarks of their respective holders. The specifications and information herein are subject to change without notice.

User Interface Text	Attribute Names	Values	Default Value
CDR Refclk	CDR_REF_RATE	27–312.5	Calculated*
CDR Multiplier	CDR_MULT	8X, 10X, 16X, 20X, 25X	25X
Rx Line Rate	RX_LINE_RATE	135 Mb/s – 3.125/5.0[1] Gb/s	3.1250 Gb/s
Tx FPGA Bus Width	TX_DATA_WIDTH	8/10-Bit, 16/20-Bit	8/10-Bit
Tx FPGA Bus Freq	TX_FICLK_RATE	Calculated[2]	Calculated[2]
Rx Rate	RX_RATE_DIV	Full Rate, Div2 Rate, Div11	Full Rate
Rx FPGA Bus Width	RX_DATA_WIDTH	8/10-Bit, 16/20-Bit	8/10-Bit
Rx FPGA Bus Freq	RX_FICLK_RATE	Calculated[2]	Calculated[2]

Notes:
1. For ECP5-5G family devices only
2. Refclk (MHz) = Data rate (Gb/s)/Multiplier

The following are the protocols that are user-selectable:

- G8B10B
- PCIe
- GbE
- SGMII
- XAUI
- SDI
- CPRI
- JESD204
- 10BSER
- 8BSER
- eDP

©2014-2023 Lattice Semiconductor Corp. All Lattice trademarks, registered trademarks, patents, and disclaimers are as listed at www.latticesemi.com/legal.
All other brand or product names are trademarks or registered trademarks of their respective holders. The specifications and information herein are subject to change without notice.

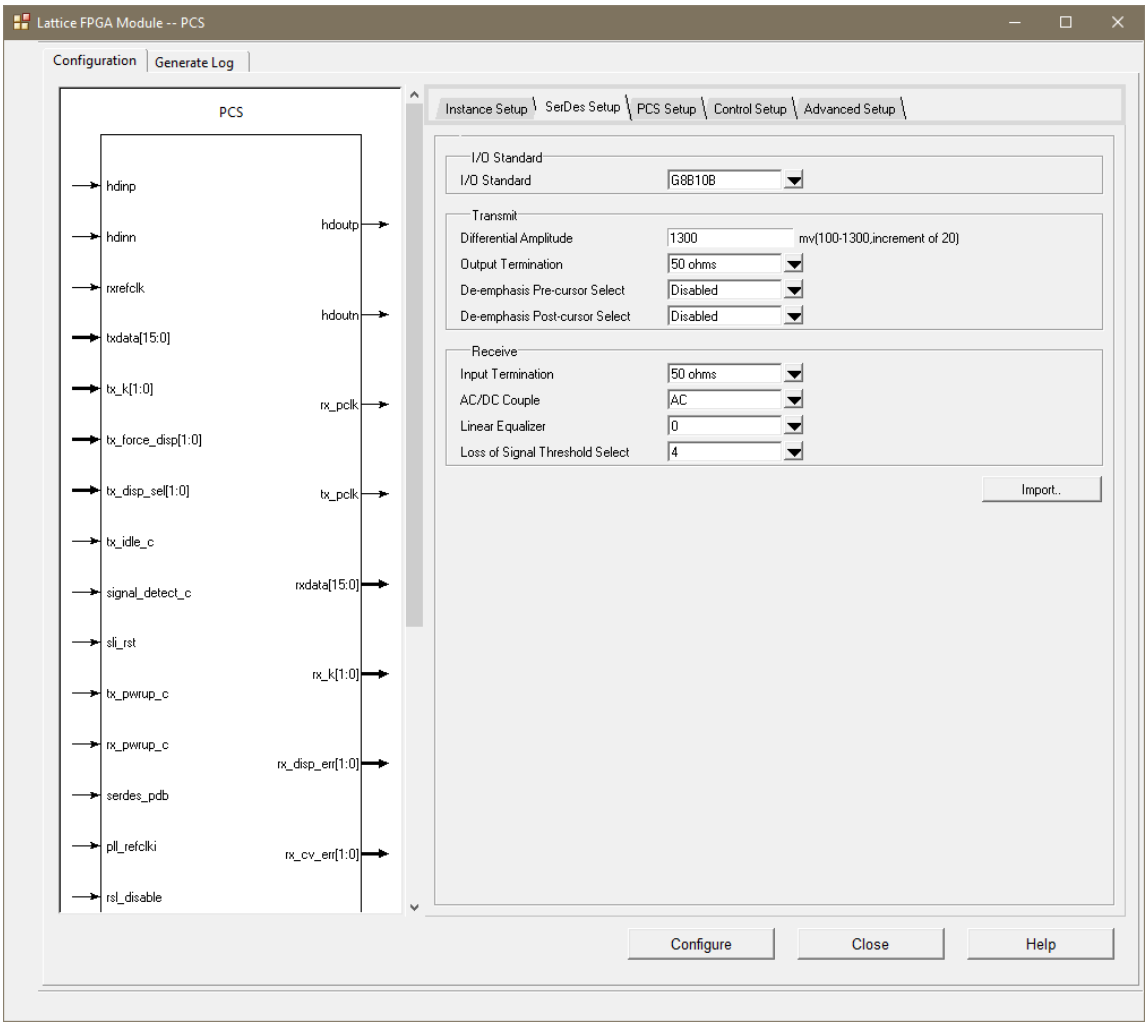

Figure 17.5. SerDes Setup Tab

©2014-2023 Lattice Semiconductor Corp. All Lattice trademarks, registered trademarks, patents, and disclaimers are as listed at www.latticesemi.com/legal.
All other brand or product names are trademarks or registered trademarks of their respective holders. The specifications and information herein are subject to change without notice.

Table 17.2. SerDes Setup Tab Description

User Interface Text	Attribute Names	Values	Default Value
I/O Standard	IO_TYPE	Protocol-dependent, Custom	Based on Protocol
Differential Amplitude	TXAMPLITUDE	100 mV – 1300 mV, in 20 mV increments	Based on Protocol
Output Termination	TXDIFFTERM	50, 75, 5K Ω	50 Ω
De-emphasis Pre-cursor Select	TXDEPRE	Disabled, 0–11	Disabled
De-emphasis Post-cursor Select	TXDEPOST	Disabled, 0–3	Disabled
Input Termination	RXDIFFTERM	50, 60, 75 Ω, HiZ	50 Ω
AC/DC Couple	RXCOUPLING	AC, DC	AC
Linear Equalizer	LEQ	Disabled, 0–3	0
Loss of Signal Threshold Select	RXLOSTHRESHOLD	0–7	4

Note: "TXDEPOST values are "DONTCARE", "DISABLED", and"0d0"-"0d11" for power calculator estimation mode to set cTDRV_SLICE<0..5>_CUR and cTDRV_SLICE<0..5>_SEL."

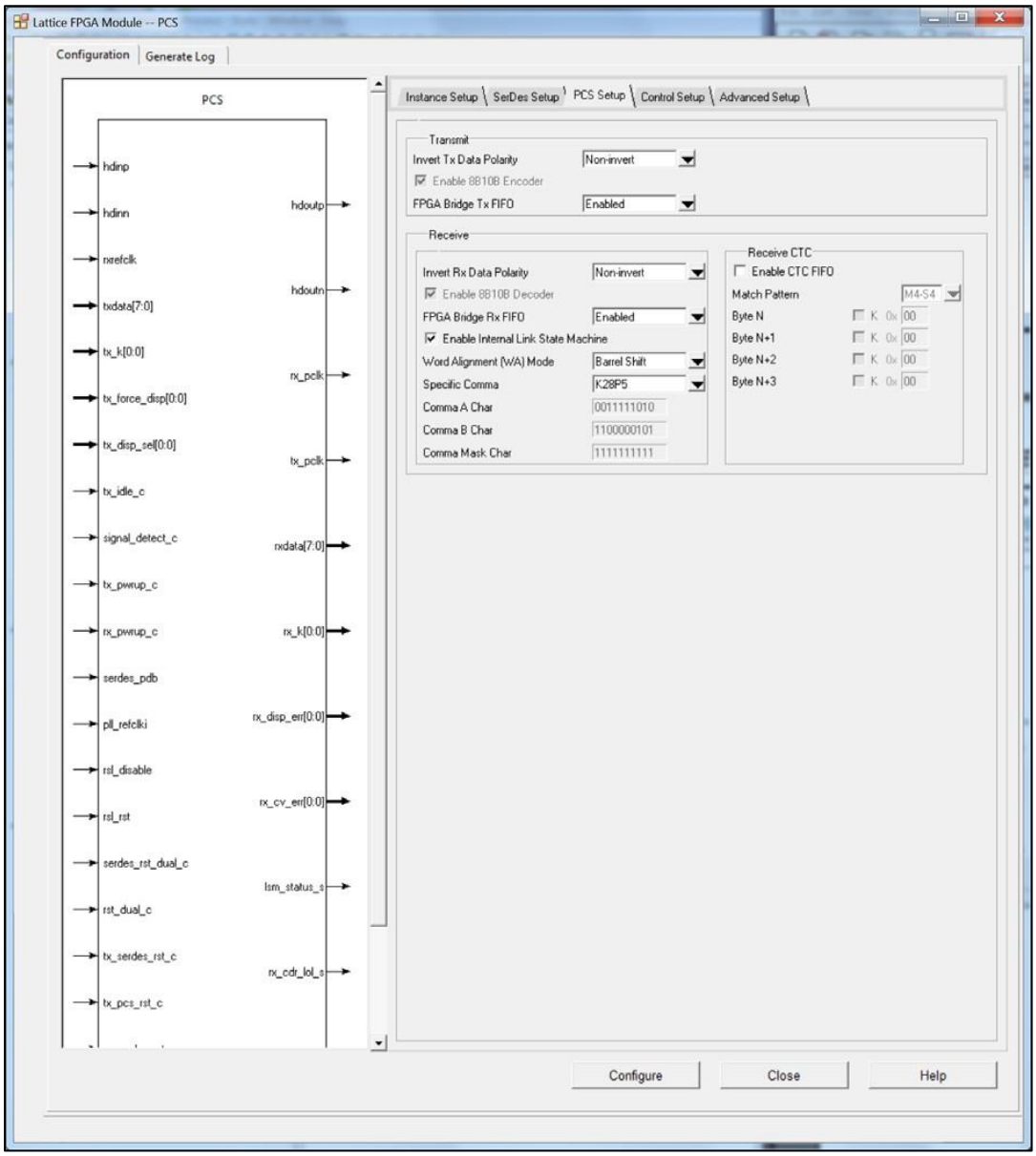

Figure 17.6. PCS Setup Tab

©2014-2023 Lattice Semiconductor Corp. All Lattice trademarks, registered trademarks, patents, and disclaimers are as listed at www.latticesemi.com/legal.
All other brand or product names are trademarks or registered trademarks of their respective holders. The specifications and information herein are subject to change without notice.

Table 17.3. PCS Setup Tab Description

User Interface Text	Attribute Names	Values	Default Value
Invert Tx Data Polarity	TXINVPOL	Non-invert, Invert	Non-invert
Enable 8B10B Encoding	TX8B10B	Enabled, Disabled	Enabled
FPGA Bridge Tx FIFO	TXFIFO_ENABLE	Enabled, Disabled	Enabled
Invert Rx Data Polarity	RXINVPOL	Non-invert, Invert, User Port	Non-invert
Enable 8B10B Decoder	RX8B10B	Enabled, Disabled	Enabled
FPGA Bridge Rx FIFO	RXFIFO_ENABLE	Enabled, Disabled	Enabled
Enable Internal Link State	RXLSM	Enabled, Disabled	Disabled
Word Alignment (WA) Mode	RXWA	Disabled, Barrel Shift, Bit Slip	Disabled
Specific Comma	RXSC	User Defined, K28P5, K28P157	User Defined
Comma A Character	RXCOMMAA	10-bit Binary	1100000101
Comma B Character	RXCOMMAB	10-bit Binary	0011111010
Comma Mask	RXCOMMAM	10-bit Binary	1111111111
Enable CTC FIFO	RXCTC	Enabled, Disabled	Disabled
Match Pattern	RXCTCMATCHPATTERN	M1-S1, M2-S2, M4-S4, M4-S1	M1-S1
Byte N (Kchar, Hex)	RXCTCBYTEN	K, 8-bit Hex	0 00H
Byte N+1 (Kchar, Hex)	RXCTCBYTEN1	K, 8-bit Hex	0 00H
Byte N+2 (Kchar, Hex)	RXCTCBYTEN2	K, 8-bit Hex	0 00H
Byte N+3 (Kchar, Hex)	RXCTCBYTEN3	K, 8-bit Hex	0 00H
Rx Multi-Channel Alignment	RXMCAENABLE	Disabled, Enabled	Disabled
Alignment Character A	ACHARA	K, 8-bit Hex	0 00H
Alignment Character B	ACHARB	K, 8-bit Hex	0 00H
Alignment Character Mask	ACHARM	K, 8-bit Hex	0 00H

©2014-2023 Lattice Semiconductor Corp. All Lattice trademarks, registered trademarks, patents, and disclaimers are as listed at www.latticesemi.com/legal.
All other brand or product names are trademarks or registered trademarks of their respective holders. The specifications and information herein are subject to change without notice.

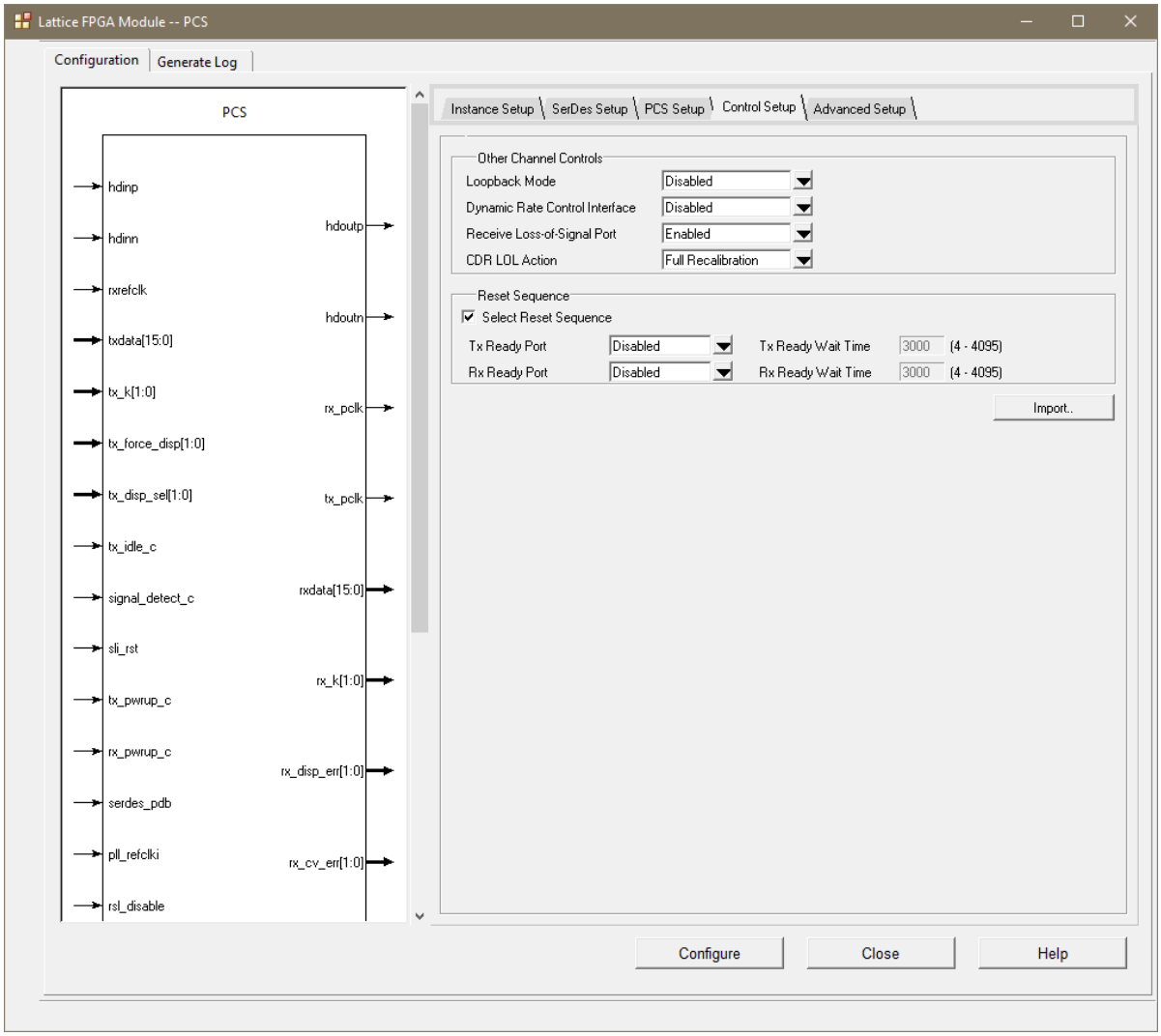

Figure 17.7. Control Setup Tab

Table 17.4. Control Setup Tab Description

User Interface Text	Attribute Names	Values	Default Value
Loopback Mode	LOOPBACK	Disabled, Rx EQ to Tx Rx Parallel to Tx, Tx Output to Rx	Based on Protocol
Dynamic Rate Control Interface	RCSRC	Disabled, Enabled	Disabled
Receive Loss-of-Signal Port	LOSPORT	Disabled, Enabled	Enabled
CDR LOL Action	CDRLOLACTION	“Nothing", "Full Recalibration", "Simple Recalibration"	Full Recalibration
Reset Sequence Select	RSTSEQSEL	None, "Tx Before Rx", "Tx/Rx Independent"	Tx Before Rx

©2014-2023 Lattice Semiconductor Corp. All Lattice trademarks, registered trademarks, patents, and disclaimers are as listed at www.latticesemi.com/legal.
All other brand or product names are trademarks or registered trademarks of their respective holders. The specifications and information herein are subject to change without notice.

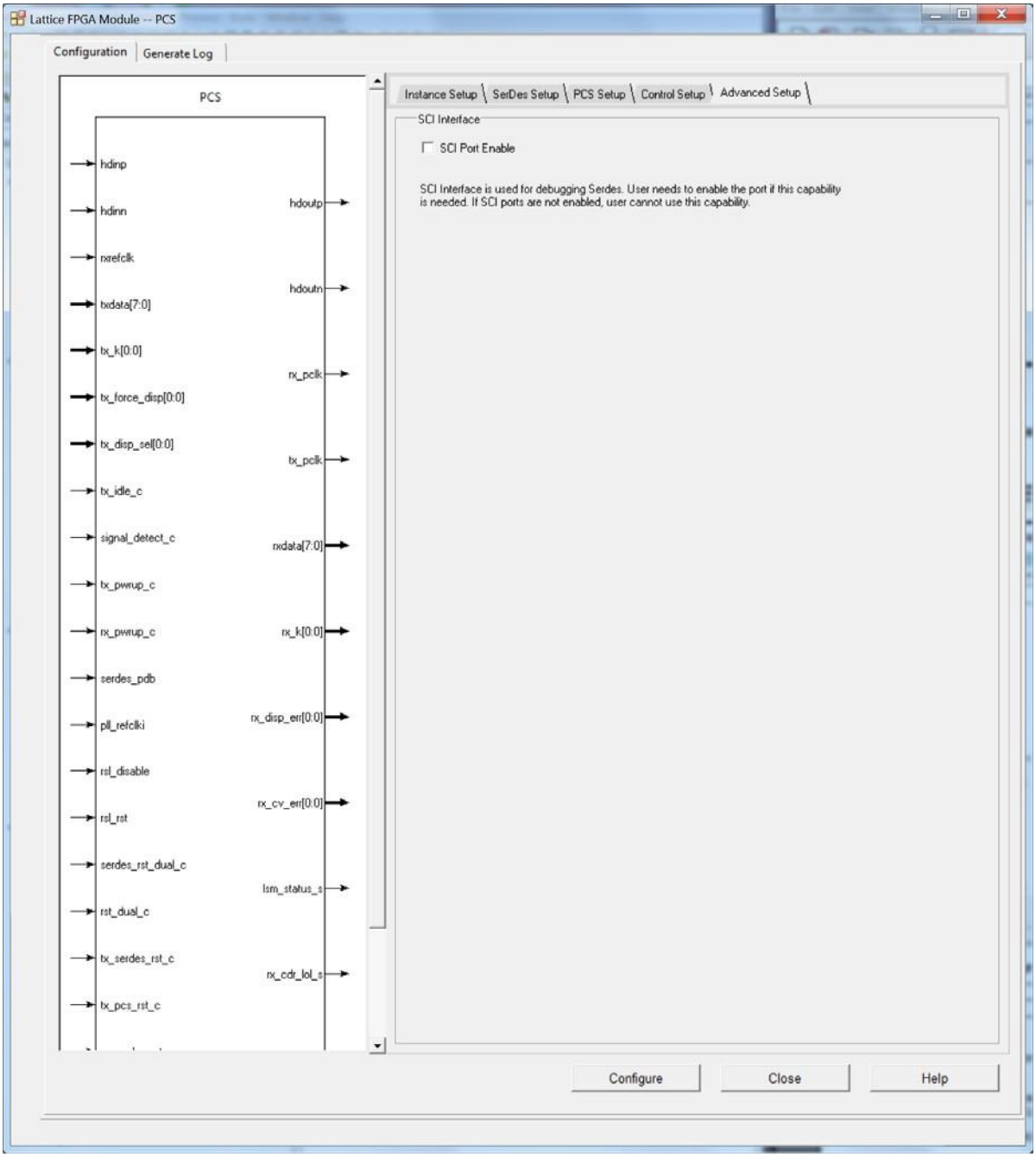

Figure 17.8. Advanced Setup Tab

Table 17.5. Advanced Setup Tab Description

User Interface Text	Attribute Names	Values	Default Value
SCI Port Enable	SCI	Enabled, Disabled	Disabled

©2014-2023 Lattice Semiconductor Corp. All Lattice trademarks, registered trademarks, patents, and disclaimers are as listed at www.latticesemi.com/legal.
All other brand or product names are trademarks or registered trademarks of their respective holders. The specifications and information herein are subject to change without notice.

17.1. EXTREF Block

The EXTREF is the reference clock input buffer primitive for the dedicated external clock inputs to the SerDes TxPLL.

The EXTREF primitive allows you to select how the reference clock input buffer is configured. There is one EXTREF block in each DCU.

Figure 17.9. EXTREF Block Diagram

The EXTREF module takes the differential external reference clock pins (refclkp/n) and sends out a single-ended clock signal to the SerDes TxPLL. The EXTREF can only connect to SerDes TxPLL in the same DCU, or to SerDes TxPLL in the complementary sharing DCU.

17.2. EXTREF I/O Port Description

refclkp – External reference clock positive input port refclkn – External reference clock negative input port

refclko – Single-ended clock signal to be connected to PCS PLL inputs

When the REFCLK module is selected, the EXTREF instance table appears.

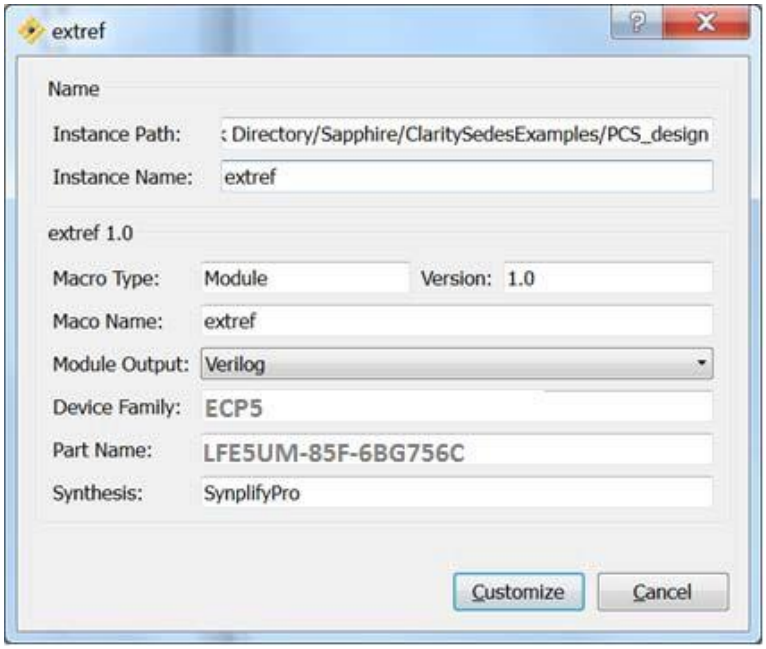

Figure 17.10. EXTREF Module In Clarity Designer

The user interface tab and description of the External RERCLK primitive are shown in Figure 17.11.

©2014-2023 Lattice Semiconductor Corp. All Lattice trademarks, registered trademarks, patents, and disclaimers are as listed at www.latticesemi.com/legal.
All other brand or product names are trademarks or registered trademarks of their respective holders. The specifications and information herein are subject to change without notice.

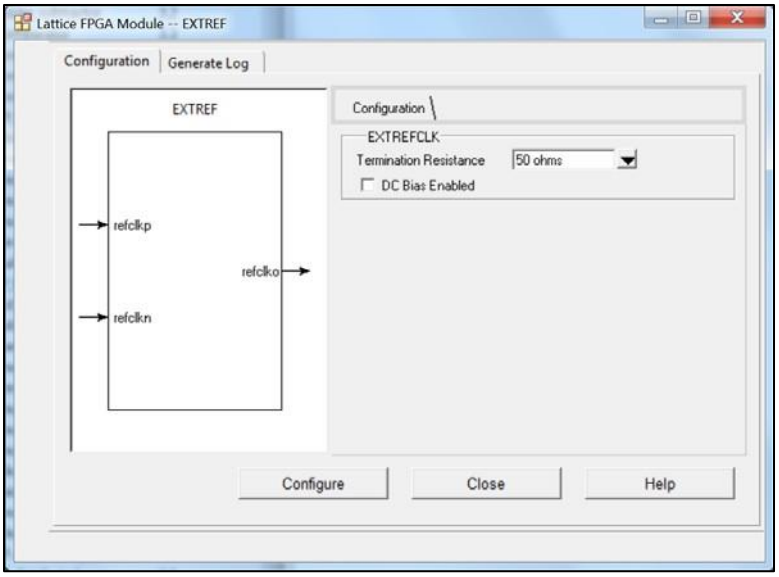

Figure 17.11. EXTREF Tab

Table 17.6. EXTREF Tab Description

User Interface Text	Attribute Names	Values	Default Value
Termination Resistance	EXTREFTERMRES	50 Ω, Hi-Z	50 Ω
DC Bias Enabled	EXTREFDCBIAS	Disabled, Enabled	Disabled

©2014-2023 Lattice Semiconductor Corp. All Lattice trademarks, registered trademarks, patents, and disclaimers are as listed at www.latticesemi.com/legal.
All other brand or product names are trademarks or registered trademarks of their respective holders. The specifications and information herein are subject to change without notice.

Appendix A. Configuration Registers

There are specific dual-level registers and channel-level registers. In each category, there are SerDes specific registers and PCS specific registers. Within these subcategories there are:

- Control registers
- Status registers
- Status registers with clear-on-read
- Interrupt Control registers
- Interrupt Status registers
- Interrupt Source registers (clear-on-read)

The following abbreviations are used to indicate what type of register access for each is supported:

- R/W: Read/Write
- RO: Read Only

Dual Registers Overview

Dual Interface Registers Map

BA	Register name	D7	D6	D5	D4	D3	D2	D1	D0
PER DUAL PCS CONTROL REGISTERS (10)									
00	DL_00	reg_sync_	force_int	char_mode	xge_mode	Spare	Spare	Spare	Spare
01	DL_01	Internal	—	—	—	—	—	—	—
02	DL_02	high_mark	high_mark[2]	high_mark[1]	high_mark[0]	low_mark[3]	low_mark[2]	low_mark[1]	low_mark[0]
03	DL_03	Reserved	Reserved	Reserved	Reserved	Reserved	pfifo_clr_sel	Internal use	Internal use
04	DL_04	Internal	—	—	—	—	—	—	—
05	DL_05	Internal	—	—	—	—	—	—	—
06	DL_06	Internal	—	—	—	—	—	—	—
07	DL_07	Internal	—	—	—	—	—	—	—
08	DL_08	Internal	—	—	—	—	—	—	—
09	DL_09	Internal use only	Internal use only	ls_sync_status_1_int_ctl	ls_sync_status_0_int_ctl	Reserved	Reserved	ls_sync_statusn_1_int_ctl	ls_sync_statusn_0_int_ctl
PER DUAL SerDes CONTROL REGISTERS (6)									
0A	DL_0A	Internal use	Reserved	tx_refck_sel	refck_dcbias_e	refck_rterm	Reserved	refck_out_sel[	Internal use
0B	DL_0B	refck25x	bus8bit_sel	Reserved	refck_from_nd_sel[1]	refck_from_nd_sel[0]	refck_to_nd_en	refck_mode[1]	refck_mode[0]
0C	DL_0C	Reserved	Reserved	Reserved	Reserved	Reserved	Reserved	cdr_lol_set[1]	cdr_lol_set[0]
0D	DL_0D	rg_set[1]	rg_set[0]	rg_en	pll_lol_set[1]	pll_lol_set[0]	Internal use	Internal use	Internal use
0E	DL_0E	Internal use	—	—	—	—	—	—	—
0F	DL_0F	plol_int_ctl	~plol_int_ctl	Reserved	Reserved	Reserved	Reserved	Reserved	Reserved
PER DUAL CLOCK RESET REGISTERS (2)									
10	DL_10	Reserved	Reserved	txpll_pwdnb	refck_pwdnb	macropdb	macro_rst	dual_rst	trst
11	DL_11	Reserved	Reserved	Reserved	Reserved	Reserved	Reserved	Reserved	Reserved
12	DL_12	Reserved	Reserved	Reserved	Reserved	Reserved	Reserved	Reserved	Reserved
13	DL_13	Reserved	Reserved	Reserved	Reserved	Reserved	Reserved	Reserved	Reserved

©2014-2023 Lattice Semiconductor Corp. All Lattice trademarks, registered trademarks, patents, and disclaimers are as listed at www.latticesemi.com/legal.
All other brand or product names are trademarks or registered trademarks of their respective holders. The specifications and information herein are subject to change without notice.

BA	Register name	D7	D6	D5	D4	D3	D2	D1	D0
PER DUAL SerDes CONFIGURATION REGISTERS									
15	DL_15	Internal use	—	—	—	—	—	—	—
16	DL_16	Internal use	—	—	—	—	—	—	—
17	DL_17	Internal use	—	—	—	—	—	—	—
18	DL_18	Internal use	—	—	—	—	—	—	—
19	DL_19	Internal use	—	—	—	—	—	—	—
1A	DL_1A	Internal use	—	—	—	—	—	—	—
1B	DL_1B	Internal use	—	—	—	—	—	—	—
1C	DL_1C	Internal use	—	—	—	—	—	—	—
1D	DL_1D	Internal use	—	—	—	—	—	—	—
PER DUAL PCS STATUS REGISTERS (5)									
20	DL_20	Reserved	Reserved		int_dua_out	Reserved	Reserved	int_cha_out[1	int_cha_out[0
21	DL_21	Reserved	Reserved	ls_sync_status_1	ls_sync_status_0	Reserved	Reserved	ls_sync_statusn_1	ls_sync_statusn_0
22	DL_22	Reserved	Reserved	ls_sync_status_1_int	ls_sync_status_0_int	Reserved	Reserved	ls_sync_statusn_1_int	ls_sync_statusn_0_int
23	DL_23	Internal use	—	—	—	—	—	—	—
24	DL_24	Internal use	—	—	—	—	—	—	—
PER DUAL SerDes STATUS REGISTERS (4)									
25	DL_25	Plol	~plol	Reserved	Reserved	Reserved	Reserved	Reserved	Reserved
26	DL_26	plol_int	~plol_int	Reserved	Reserved	Reserved	Reserved	Reserved	Reserved
27	DL_27	Reserved	Reserved	Reserved	Reserved	Reserved	Reserved	Reserved	Reserved
28	DL_28	Reserved	Reserved	Reserved	Reserved	Reserved	Reserved	Reserved	Reserved

Note: BA – Base Address (Hex)

Per Dual PCS Control Register Details

PCS Control Register 1 (DL_00)

Bit	Name	Description	Type	Default
3:0	Reserved	—	R/W	0
4	xge_mode	1 – Selects 10 Gb Ethernet (selects a different 10G XAUI LSM and some slight differences in 8B10B encoding behavior relative to GE mode). 0 – Depends on Channel Mode Selection.	R/W	
5	char_mode	1 – Enable SerDes characterization mode. 0 – Disable SerDes characterization mode.	R/W	0
6	force_int	1 – Force to generate interrupt signal. 0 – Normal operation	R/W	0
7	reg_sync_toggle	Transition – Reset the four Tx Serializers to minimize Tx Lane-to-Lane Skew. Level – Normal operation of Tx Serializers	R/W	0

©2014-2023 Lattice Semiconductor Corp. All Lattice trademarks, registered trademarks, patents, and disclaimers are as listed at www.latticesemi.com/legal.
All other brand or product names are trademarks or registered trademarks of their respective holders. The specifications and information herein are subject to change without notice.

PCS Control Register 3 (DL_02)

Bit	Name	Description	Type	Default
3:0	low_mark [3:0]	Clock compensation FIFO low water mark. Mean is 4'b1000.	R/W	4'b0101
7:4	high_mark [3:0]	Clock compensation FIFO high water mark. Mean is 4'b1000.	R/W	4'b1011

PCS Control Register 4 (DL_03)

Bit	Name	Description	Type	Default
0	Internal use only	—	—	—
1	Internal use only	—	—	—
2	pfifo_clr_sel	1 – pfifo_clr signal or channel register bit clears the FIFO 0 – pfifo_error internal signal self clears the FIFO	R/W	0
7:3	Reserved	—	R/W	0

PCS Interrupt Control Register 10 (DL_09)

Bit	Name	Description	Type	Default
0	ls_sync_statusn_0_int_ctl	1 – Enable interrupt for ls_sync_status_0 when it goes low (out of sync) 0 – Disable interrupt for ls_sync_status_0 when it goes low (out of sync)	R/W	0
1	ls_sync_statusn_1_int_ctl	1 – Enable interrupt for ls_sync_status_1 when it goes low (out of sync) 0 – Disable interrupt for ls_sync_status_1 when it goes low (out of sync)	R/W	0
3:2	Reserved	—	—	—
4	ls_sync_status_0_int_ctl	1 – Enable interrupt for ls_sync_status_0 (in sync) 0 – Disable interrupt for ls_sync_status_0 (in sync)	R/W	0
5	ls_sync_status_1_int_ctl	1 – Enable interrupt for ls_sync_status_1 (in sync) 0 – Disable interrupt for ls_sync_status_1 (in sync)	R/W	0
7:6	Internal use only	—	—	—

©2014-2023 Lattice Semiconductor Corp. All Lattice trademarks, registered trademarks, patents, and disclaimers are as listed at www.latticesemi.com/legal.
All other brand or product names are trademarks or registered trademarks of their respective holders. The specifications and information herein are subject to change without notice.

Per Dual SerDes Control Register Details

SerDes Control Register 1 (DL_0A)

Bit	Name	Description	Type	Default
1:0	REFCK_OUT_SEL [1:0]	Refck outputs enable/disable control[0]: 0 – rx_refck_local output disable 1 – rx_refck_local output enable	R/W	2'b00
		[1]: 0 – refck2core output disable 1 – refck2core output enable		
2	Reserved	—	R/W	0
3	REFCK_RTERM	Termination at reference clock input buffer 1 – 100 Ω 0 – High Impedance	R/W	0
4	REFCK_DCBIAS_EN	1 – Reference clock internal dc bias enabled 0	R/W	
5	TX_REFCK_SEL	TxPLL reference clock select 1 – ck_core_tx 0 – rx_refck_local	R/W	0
6	Reserved	—	R/W	0
7	Internal use only	—	—	—

SerDes Control Register 2 (DL_0B)

Bit	Name	Description	Type	Default

1:0	REFCK_MODE[1:0]	If REFCK25X=0, then
		00 – Internal high-speed bit clock is 20x
		01 – Internal high-speed bit clock is 10x
		10 – Internal high-speed bit clock is 16x
		11 – Internal high-speed bit clock is 8x
		If REFCK25X=1, then
		xx – Internal high-speed bit clock is 25x
			R/W	2'b00

2	REFCK_TO_ND_EN	1 – Enable REFCLK to Neighboring Dual	R/W	0
3	REFCK_FROM_ND_SEL[0]	1 – Select TX REFCLK from Neighboring Dual	R/W	0
4	REFCK_FROM_ND_SEL[1]	1 – Select RX REFCLK from Neighboring Dual	R/W	0
5	Reserved	—	—	—
6	BUS8BIT_SEL	1 – Select 8-bit bus width 0 – Select 10-bit bus width	R/W	0
7	REFCK25X	1 – Internal high-speed bit clock is 25x (for REFCLK = 100 MHz only) 0 – See REFCK_MODE	R/W	0

SerDes Control Register 3 – (DL_0C)

Bit	Name	Description	R/W	Default
1:0	CDR_LOL_SET [1:0]	CDR loss of lock setting: Lock Unlock 00 – ±1000 ppm x2 = ±1500 ppm x2 01 – ±2000 ppm x2 = ±2500 ppm x2 10 – ±4000 ppm = ±7000 ppm 11 – ±300 ppm = ±450 ppm	R/W	2'b00
7:2	Reserved	—	—	—

©2014-2023 Lattice Semiconductor Corp. All Lattice trademarks, registered trademarks, patents, and disclaimers are as listed at www.latticesemi.com/legal.
All other brand or product names are trademarks or registered trademarks of their respective holders. The specifications and information herein are subject to change without notice.

SerDes Control Register 4 (DL_0D)

Bit	Name	Description	R/W	Default
2:0	TX_VCO_CK_DIV [2:0]	VCO output frequency select: 00x – Divided by 1 01x – Divided by 2 100 – Divided by 4 101 – Divided by 8 110 – Divided by 16 111 – Divided by 32	R/W	3'b000
4:3	PLL_LOL_SET [1:0]	TxPLL loss of lock setting: Lock Unlock 00 – ±300 ppm x2 = ±600 ppm x2 01 – ±300 ppm = ±2000 ppm 10 – ±1500 ppm = ±2200 ppm 11 – ±4000 ppm = ±6000 ppm	R/W	2'b00
5	Internal use only	—	—	—
7:6	Internal use only	—	—	—

SerDes Interrupt Control Register 6 (DL_0F)

Bit	Name	Description	R/W	Default
5:0	Reserved	—	—	—
6	~PLOL_INT_CTL	1 – Interrupt enabled for obtaining lock on PLOL 0 – Interrupt not enabled for obtaining lock PLOL	R/W	0
7	PLOL_INT_CTL	1 – Interrupt enabled for loss of lock on PLOL 0 – Interrupt not enabled for loss of lock PLOL	R/W	0

Per Dual Reset and Clock Control Register Details

Reset and Clock Control Register 1 (DL_10)

Bit	Name	Description	R/W	Default
0	trst	1 – Reset TxPLL Loss of Lock	R/W	0
1	dual_rst	1 – Assert dual reset	R/W	0
2	macro_rst	1 – Assert macro reset	R/W	0
3	macropdb	0 – Assert power down	R/W	1
4	refck_pwdnb	Reference clock power down control 0 – Power down 1 – Power up	R/W	0
5	txpll_pwdnb	TXPLL power down control 0 – Power down 1 – Power up	R/W	0
6	Reserved	—	—	—
7	Reserved	—	—	—

Reset and Clock Control Register 2 (DL_11)

Bit	Name	Description	R/W	Default
7:0	Reserved	—	—	—

©2014-2023 Lattice Semiconductor Corp. All Lattice trademarks, registered trademarks, patents, and disclaimers are as listed at www.latticesemi.com/legal.
All other brand or product names are trademarks or registered trademarks of their respective holders. The specifications and information herein are subject to change without notice.

SerDes Control Register 6 (DL_12)

Bit	Name	Description	R/W	Default
7:0	Reserved	—	—	—

SerDes Control Register 7 (DL_13)

Bit	Name	Description	R/W	Default
7:0	Reserved	—	—	—

Per Dual PCS Status Register Details

PCS Status Register 1 (DL_20)

Bit	Name	Description	R/W	Int
1:0	int_cha_out [1:0]	Per Channel Interrupt status	RO	N
3:2	Reserved	—	—	—
4	int_dua_out	Per Dual Interrupt status	RO	N
5	Spare	Delayed global resetn from tri_ion	RO	N
7:6	Reserved	—	—	—

PCS Status Register 2 (DL_21)

Bit	Name	Description	R/W	Int
0	ls_sync_statusn_0	1 – Alarm generated on sync_status_0 when it goes low (out of sync) 0 – Alarm not generated on sync_status_0 when it goes low (out of sync)	RO	Y
1	ls_sync_statusn_1	1 – Alarm generated on sync_status_1 when it goes low (out of sync) 0 – Alarm not generated on sync_status_1 when it goes low (out of sync)	RO	Y
3:2	Reserved	—	—	—
4	ls_sync_status_0	1 – Alarm generated on sync_status_0 0 – Alarm not generated on sync_status_0	RO	Y
5	ls_sync_status_1	1 – Alarm generated on sync_status_1 0 – Alarm not generated on sync_status_1	RO	Y
7:6	Reserved	—	—	—

©2014-2023 Lattice Semiconductor Corp. All Lattice trademarks, registered trademarks, patents, and disclaimers are as listed at www.latticesemi.com/legal.
All other brand or product names are trademarks or registered trademarks of their respective holders. The specifications and information herein are subject to change without notice.

PCS Packet Interrupt Status Register 3 (DL_22)

Bit	Name	Description	R/W	Int
0	ls_sync_statusn_0_int	1 – Interrupt generated on sync_status_0 when it goes low (out of sync) 0 – Interrupt not generated on sync_status_0 when it goes low (out of sync)	RO CR	Y
1	ls_sync_statusn_1_int	1 – Interrupt generated on sync_status_1 when it goes low (out of sync) 0 – Interrupt not generated on sync_status_1 when it goes low (out of sync)	RO CR	Y
3:2	Reserved	—	—	—
4	ls_sync_status_0_int	1 – Interrupt generated on sync_status_3 (in sync) 0 – Interrupt not generated on sync_status_3 (in sync)	RO CR	Y
5	ls_sync_status_1_int	1 – Interrupt generated on sync_status_2 (in sync) 0 – Interrupt not generated on sync_status_2 (in sync)	RO CR	Y
7:6	Reserved	—	—	—

Per Dual SerDes Status Register Details

SerDes Status Register 1 (DL_25)

Bit	Name	Description	R/W	Int
5:0	Reserved	—	—	—
6	PLOL_STSB	1 – PLL lock obtained	RO	Y
7	PLOL_STS	1 – PLL Loss of lock	RO	Y

SerDes Interrupt Status Register 2 (DL_26)

Bit	Name	Description	R/W	Int
5:0	Reserved	—	—	—
6	~PLOL_INT	1 – Interrupt generated on ~PLOL 0 – Interrupt not generated ~PLOL	RO CR	Y
7	PLOL_INT	1 – Interrupt generated on PLOL 0 – Interrupt not generated PLOL	RO CR	Y

©2014-2023 Lattice Semiconductor Corp. All Lattice trademarks, registered trademarks, patents, and disclaimers are as listed at www.latticesemi.com/legal.
All other brand or product names are trademarks or registered trademarks of their respective holders. The specifications and information herein are subject to change without notice.

Per Channel Register Overview

Channel Interface Registers Map

BA	Register name	D7	D6	D5	D4	D3	D2	D1	D0
PER CHANNEL GERNERAL REGISTERS (16)									
00	CH_00	Spare	Spare	Spare	wa_mode	rio_mode	pcie_mode	Spare	uc_mode
01	CH_01	enable_cg_align	prbs_enable	Internal use only	ge_an_enable	Spare	Internal use only	invert_tx	invert_rx
02	CH_02	pfifo_clr	pcie_ei_en	pcs_det_time_sel[1]	pcs_det_time_sel[0]	rx_gear_mode	tx_gear_mode	Reserved	Reserved
03	CH_03	Spare	sb_bypass	Internal use only	sb_bist_sel	Internal use only	sel_bist_txd4enc	tx_gear_bypass	fb_loopback
04	CH_04	lsm_disable	signal_detec	rx_gear_bypas	ctc_bypass	dec_bypass	wa_bypass	rx_sb_bypas	sb_loopback
05	CH_05	min_ipg_cnt[1]	min_ipg_cnt[0]	match_4_enable	match_2_enable	Spare	Spare	Spare	Spare
06	CH_06	cc_match_1[7]	cc_match_1[6]	cc_match_1[5]	cc_match_1[4]	cc_match_1[3]	cc_match_1[2]	cc_match_1[1]	cc_match_1[0
07	CH_07	cc_match_2[7]	cc_match_2[6]	cc_match_2[5]	cc_match_2[4]	cc_match_2[3]	cc_match_2[2]	cc_match_2[1]	cc_match_2[0
08	CH_08	cc_match_3[7]	cc_match_3[6]	cc_match_3[5]	cc_match_3[4]	cc_match_3[3]	cc_match_3[2]	cc_match_3[1]	cc_match_3[0
09	CH_09	cc_match_4[7]	cc_match_4[6]	cc_match_4[5]	cc_match_4[4]	cc_match_4[3]	cc_match_4[2]	cc_match_4[1]	cc_match_4[0
0A	CH_0A	cc_match_4[9]	cc_match_4[8]	cc_match_3[9]	cc_match_3[8]	cc_match_2[9]	cc_match_2[8]	cc_match_1[9]	cc_match_1[8
0B	CH_0B	udf_comma_mask[7]	udf_comma_mask[6]	udf_comma_mask[5]	udf_comma_mask[4]	udf_comma_mask[3]	udf_comma_mask[2]	udf_comma_mask[1]	udf_comma_mask[0]
0C	CH_0C	udf_comma_a[7]	udf_comma_a[6]	udf_comma_a[5]	udf_comma_a[4]	udf_comma_a[3]	udf_comma_a[2]	udf_comma_a[1]	udf_comma
0D	CH_0D	udf_comma_b[7]	udf_comma_b[6]	udf_comma_b[5]	udf_comma_b[4]	udf_comma_b[3]	udf_comma_b[2]	udf_comma_b[1]	udf_comma
0E	CH_0E	udf_comma_a[9]	udf_comma_a[8]	udf_comma_b[9]	udf_comma_b[8]	udf_comma_mask[9]	udf_comma_mask[8]		
0F	CH_0F	Reserved	Reserved	Reserved	Reserved	cc_underrun_	cc_overrun_int_ctl	fb_rx_fifo_error_int_ctl	fb_tx_fifo_error_int_ctl
PER CHANNEL SerDes CONTROL REGISTERS (15)									
10	CH_10	tx_post_sign	tx_pre_sign	tdrv_post_e	tdrv_pre_en	ldr_core2tx_	tx_div11_sel	rate_mode_t	tpwdnb
11	CH_11	Spare	tx_cm_sel[1]	tx_cm_sel[0]	rterm_tx[4]	rterm_tx[3]	rterm_tx[2]	rterm_tx[1]	rterm_tx[0]
12	CH_12	tdrv_slice3_sel[1]	tdrv_slice3_sel[0]	tdrv_slice2_sel[1]	tdrv_slice2_sel[0]	tdrv_slice1_sel[1]	tdrv_slice1_sel[0]	tdrv_slice0_sel[1]	tdrv_slice0_sel[0]
13	CH_13	tdrv_slice4_cur[1]	tdrv_slice4_cur[0]	tdrv_slice3_cur[1]	tdrv_slice3_cur[0]	tdrv_slice5_sel[1]	tdrv_slice5_sel[0]	tdrv_slice4_sel[1]	tdrv_slice4_sel[0]
14	CH_14	tdrv_slice2_cur[1]	tdrv_slice2_cur[0]	tdrv_slice1_cur[2]	tdrv_slice1_cur[1]	tdrv_slice1_cur[0]	tdrv_slice0_cur[2]	tdrv_slice0_cur[1]	tdrv_slice0_cur[0]
15	CH_15	tdrv_slice5_cur[1]	tdrv_slice5_cur[0]	tdrv_dat_sel[1]	tdrv_dat_sel[0]	lb_ctl[3]	lb_ctl[2]	lb_ctl[1]	lb_ctl[0]
16	CH_16	rxterm_cm[1]	rxterm_cm[0]	rcv_dcc_en	rx_refck_sel	ldr_rx2core_sel	rx_div11_sel	rate_mode_rx	rpwdnb
17	CH_17	rxin_cm[1]	rxin_cm[0]]	Reserved	rterm_rx[4]	rterm_rx[3]	rterm_rx[2]	rterm_rx[1]	rterm_rx[0]
18	CH_18	fc2dco_dloo	fc2dco_floop	Reserved	Spare	Reserved	Reserved	Reserved	Reserved
19	CH_19	Spare	req_lvl_set[1	req_lvl_set[0	rx_rate_sel[3	rx_rate_sel[2	rx_rate_sel[1	rx_rate_sel[0	req_en
1A	CH_1A	band_calib_mode	en_recalib	dco_calib_rst	dco_facq_rst	pden_sel	rx_dco_ck_div[2]	rx_dco_ck_div[1]	rx_dco_ck_div[0]
1B	CH_1B	rlos_sel	rx_los_en	rx_los_hyst_e	rx_los_ceq[1	rx_los_ceq[0	rx_los_lvl[2]	rx_los_lvl[1]	rx_los_lvl[0]
1C	CH_1C	Spare	Spare	Spare	Spare	Spare	Spare	Spare	Spare
1D	CH_1D	Spare	Spare	Spare	Spare	Spare	Spare	Spare	Spare
1E	CH_1E		pci_det_done_int_ctl	rlos_int_ctl	~rlos_int_ctl	Reserved	Reserved	rlol_int_ctl	~rlol_int_ctl
1F	CH_1F	rrst	lane_rx_rst	lane_tx_rst	ff_tx_f_clk_d	ff_tx_h_clk_en	ff_rx_f_clk_dis	ff_rx_h_clk_en	sel_sd_rx_cl

©2014-2023 Lattice Semiconductor Corp. All Lattice trademarks, registered trademarks, patents, and disclaimers are as listed at www.latticesemi.com/legal.
All other brand or product names are trademarks or registered trademarks of their respective holders. The specifications and information herein are subject to change without notice.

BA	Register name	D7	D6	D5	D4	D3	D2	D1	D0
20	CH_20	Reserved	Reserved	Reserved	Reserved	Reserved	Reserved	Reserved	Reserved
PER CHANNEL PCS STATUS REGISTERS (6)									
30	CH_30	—	—	—	pfifo_error	cc_underrun	cc_overrun	fb_rx_fifo_error	fb_tx_fifo_error
31	CH_31	prbs_error_cnt[7]	prbs_error_cnt[6]	prbs_error_count[5]	prbs_error_cnt[4]	prbs_error_cnt[3]	prbs_error_cnt[2]	prbs_error_cnt[1]	prbs_error_cnt[0]
32	CH_32					wa_offset[3]	wa_offset[2]	wa_offset[1]	wa_offset[0]
33	CH_33	Reserved	Reserved	Reserved	Reserved	cc_underrun_int	cc_overrun_int	fb_rx_fifo_error_int	fb_tx_fifo_error_int
34	CH_34	Reserved	ffs_ls_sync_status	fb_rxrst_o	fb_txrst_o	Reserved	Reserved	cc_re_o	cc_we_o
35	CH_35	Reserved	Reserved	Reserved	Reserved	Reserved	Reserved	Reserved	Reserved
PER CHANNEL SerDes STATUS REGISTERS (7)									
36	CH_36	—	pci_det_done	rlos	~rlos	—	—	rlol	~rlol
37	CH_37	dco_calib_err	dco_calib_done	dco_facq_err	dco_facq_done	—	—	—	pci_connect
38	CH_38	Reserved	—	—	—	—	—	—	—
39	CH_39	Reserved	—	—	—	—	—	—	—
3a	CH_3A	—	pci_det_done_int	rlos_int	~rlos_int	—	—	rlol_int	~rlol_int
3b	CH_3B	Reserved	—	—	—	—	—	—	—
3c	CH_3C	Reserved	—	—	—	—	—	—	—

Note: BA – Base Address (Hex)

Per Channel PCS Register Details

PCS Control Register 1 (CH_00)

Bit	Name	Description	R/W	Default
0	uc_mode	1 – Selects User Configured mode 0 – Selects other mode (PCIe, RapidIO, 10GbE, 1GbE)	R/W	0
1	Reserved	—	—	—
2	pcie_mode	1 – PCI-Express mode of operation 0 – Selects other mode (RapidIO, 10GbE, 1GbE)	R/W	0
3	rio_mode	1 – Selects Rapid-IO mode 0 – Selects other mode (10GbE, 1GbE)	R/W	0
4	wa_mode	1 – Bit slip word alignment mode 0 – Barrel shift word alignment mode	R/W	0
7:5	Reserved	—	R/W	0

©2014-2023 Lattice Semiconductor Corp. All Lattice trademarks, registered trademarks, patents, and disclaimers are as listed at www.latticesemi.com/legal.
All other brand or product names are trademarks or registered trademarks of their respective holders. The specifications and information herein are subject to change without notice.

PCS Control Register 2 (CH_01)

Bit	Name	Description	R/W	Default
0	invert_rx	1 – Invert received data 0 – Do not invert received data	R/W	0
1	invert_tx	1 – Invert transmitted data 0 – Do not invert transmitted data	R/W	0
2	Internal use only	—	—	—
3	Reserved	—	—	—
4	ge_an_enable	1 – Enable GigE Auto-Negotiation 0 – Disable GigE Auto-Negotiation	R/W	0
5	Internal use only	—	—	—
6	Internal use only	—	—	—
7	enable_cg_align	Only valid when operating in uc_mode 1 – Enable continuous comma alignment 0 – Disable continuous comma alignment	R/W	0

PCS Control Register 3 (CH_02)

Bit	Name	Description	R/W	Default
0	tx_ch	1 – Transmit PCS inputs are sourced from test characterization ports. The test characterization mode should be enabled.	R/W	0
1:0	Reserved	—	—	—
2	tx_gear_mode	1 – Enable 2:1 gearing for transmit path on selected channels 0 – Disable 2:1 gearing for transmit path on selected channels (no gearing)	R/W	0
3	rx_gear_mode	1 – Enable 2:1 gearing for receive path on selected channels 0 – Disable 2:1 gearing for receive path on selected channels (no gearing)	R/W	0
5:4	pcs_det_time_sel[1:0]	PCS connection detection time 11 – 16 µs 10 – 4 µs 01 – 2 µs 00 – 8 µs	R/W	0
6	pcie_ei_en	1 – PCI Express Electrical Idle 0 – Normal operation	R/W	0
7	pfifo_clr	1 – Clears PFIFO if dual register bit pfifo_clr_sel is set to 1. This signal is Ored with interface signal pfifo_clr. 0 – Normal operation	R/W	0

©2014-2023 Lattice Semiconductor Corp. All Lattice trademarks, registered trademarks, patents, and disclaimers are as listed at www.latticesemi.com/legal.
All other brand or product names are trademarks or registered trademarks of their respective holders. The specifications and information herein are subject to change without notice.

PCS Control Register 4 (CH_03)

Bit	Name	Description	R/W	Default
0	fb_loopback	1 – Enable loopback in the PCS just before the FPGA bridge from RX to TX 0 – Normal data operation	R/W	0
1	tx_gear_bypass	1 – Bypass PCS Tx gearbox 0 – Normal operation	R/W	0
2	Internal use only	—	—	—
3	enc_bypass	1 – Bypass 8b10b encoder 0 – Normal operation	R/W	0
4	Internal use only	—	—	—
5	sb_pfifo_lp	1 – Enable Parallel Loopback from Rx to Tx through parallel FIFO 0 – Normal data operation	R/W	0
6	sb_bypass	1 – Invert TX data after SerDes Bridge 0 – Do not invert TX data after SerDes Bridge **Note**: Loopback data is inverted	R/W	0
7	Reserved	—	—	—

PCS Control Register 5 (CH_04)

Bit	Name	Description	R/W	Default
0	sb_loopback	1 – Enable loopback in the PCS from Tx to Rx in SerDes bridge 0 – Normal data operation	R/W	0
1	rx_sb_bypass	1 – Invert RX data after SerDes bridge 0 – Normal operation	R/W	0
2	wa_bypass	1 – Bypass word alignment 0 – Do not invert RX data after SerDes Bridge (Note: Loopback data is inverted)	R/W	0
3	dec_bypass	1 – Bypass 8b10b decoder 0 – Normal operation	R/W	0
4	ctc_bypass	1 – Bypass clock toleration compensation 0 – Normal operation	R/W	0
5	rx_gear_bypass	1 – Bypass PCS Rx gear box 0 – Normal operation	R/W	0
6	signal_detect	1 – Force enabling the Rx link state machine 0 – Dependent of ffc_signal_detect to enable the Rx link state machine	R/W	0
7	lsm_disable	1 – Disable Rx link state machine 0 – Enable Rx link state machine	R/W	0

PCS Control Register 6 (CH_05)

If neither match enable bit is set below, single character skip matching is performed using match 4.

Bit	Name	Description	R/W	Default
3:0	Reserved	—	—	—
4	match_2_enable	1 – Enable two character skip matching (using match 4, 3)	R/W	1
5	match_4_enable	1 – Enable four character skip matching (using match 4, 3, 2, 1)	R/W	0
7:6	min_ipg_cnt [1:0]	Minimum IPG to enforce	R/W	2’b11

©2014-2023 Lattice Semiconductor Corp. All Lattice trademarks, registered trademarks, patents, and disclaimers are as listed at www.latticesemi.com/legal.
All other brand or product names are trademarks or registered trademarks of their respective holders. The specifications and information herein are subject to change without notice.

PCS Control Register 7 – CC match 1 LO (CH_06)

Bit	Name	Description	R/W	Default
7:0	cc_match_1 [7:0]	Lower bits of user-defined clock compensator skip pattern 1	R/W	8'h00

PCS Control Register 8 – CC match 2 LO (CH_07)

Bit	Name	Description	R/W	Default
7:0	cc_match_2[7:0]	Lower bits of user-defined clock compensator skip pattern 2	R/W	8'h00

PCS Control Register 9 – CC match 3 LO (CH_08)

Bit	Name	Description	R/W	Default
7:0	cc_match_3[7:0]	Lower bits of user-defined clock compensator skip pattern 3	R/W	8'hBC

PCS Control Register 10 – CC match 4 LO (CH_09)

Bit	Name	Description	R/W	Default
7:0	cc_match_4[7:0]	Lower bits of user-defined clock compensator skip pattern 3	R/W	8'h50

PCS Control Register 11 – CC match HI (CH_0A)

Bit	Name	Description	R/W	Default
1:0	cc_match_1 [9:8]	Upper bits of user-defined clock compensator skip pattern 1 [9] – Disparity error [8] – K control	R/W	2'b00
2:3	cc_match_2 [9:8]	Upper bits of user-defined clock compensator skip pattern 2 [9] – Disparity error [8] – K control	R/W	2'b00
4:5	cc_match_3 [9:8]	Upper bits of user-defined clock compensator skip pattern 3 [8] – K control [9] – Disparity error	R/W	2'b01
7:6	cc_match_4 [9:8]	Upper bits of user-defined clock compensator skip pattern 4 [8] – K control [9] – Disparity error	R/W	2'b01

PCS Control Register 12 – UDF Comma Mask LO (CH_0B)

Bit	Name	Description	R/W	Default
7:0	udf_comma_mask [7:0]	Lower bits of user-defined comma mask	R/W	8'hFF

PCS Control Register 13 – UDF comma a LO (CH_0C)

Bit	Name	Description	R/W	Default
7:0	udf_comma_a [7:0]	Lower bits of user-defined comma character 'a'	R/W	8'h83

©2014-2023 Lattice Semiconductor Corp. All Lattice trademarks, registered trademarks, patents, and disclaimers are as listed at www.latticesemi.com/legal.
All other brand or product names are trademarks or registered trademarks of their respective holders. The specifications and information herein are subject to change without notice.

PCS Control Register 14 – UDF comma b LO (CH_0D)

Bit	Name	Description	R/W	Default
7:0	udf_comma_b [7:0]	Lower bits of user-defined comma character 'b'	R/W	8'h7c

PCS Control Register 15 – UDF comma HI (CH_0E)

Bit	Name	Description	R/W	Default
1:0	Reserved	—	—	—
3:2	udf_comma_mask [9:8]	Upper bits of user-defined comma mask	R/W	2'b11
5:4	udf_comma_b [9:8]	Upper bits of user-defined comma character 'b'	R/W	2'b01
7:6	udf_comma_a [9:8]	Upper bits of user-defined comma character 'a'	R/W	2'b10

PCS Interrupt Control Register 16 (CH_0F)

Bit	Name	Description	R/W	Default
0	fb_tx_fifo_error_int_ctl	1 – Enable interrupt on empty/full condition in the transmit FPGA bridge FIFO	R/W	0
1	fb_rx_fifo_error_int_ctl	1 – Enable interrupt on empty/full condition in the receive FPGA bridge FIFO	R/W	0
2	cc_overrun_int_ctl	1 – Enable interrupt for cc_overrun 0 – Disable interrupt for cc_overrun	R/W	0
3	cc_underrun_int_ctl	1 – Enable interrupt for cc_underrun 0 – Disable interrupt for cc_underrun	R/W	0
7:4	Reserved	—	R/W	0

Per Channel SerDes Control Register Details

SerDes Control Register 1 (CH_10)

Bit	Name	Description	R/W	Default
0	tpwdnb	0 – Power down transmit channel 1 – Power up transmit channel	R/W	0
1	rate_mode_tx	0 – Full rate selection for transmit 1 – Half rate selection for transmit	R/W	0
2	tx_div11_sel	0 – Full rate selection for transmit (high definition SMPTE) 1 – Divide by 11 selection for transmit (standard definition SMPTE)	R/W	0
3	ldr_core2tx_sel	1 – Select low-speed serial data from FPGA core	R/W	0
4	tdrv_pre_en	1 – Tx driver de-emphasis enable 0 – Tx driver de-emphasis disable	R/W	0
5	tdrv_post_en	1 – Tx driver post-emphasis enable 0 – Tx post-emphasis disable	R/W	0
6	tx_pre_sign	1 – Tx pre-emphasis not inverted 0 – Tx pre-emphasis inverted	R/W	0
7	tx_post_sign	1 – Tx post-emphasis not inverted 0 – Tx post-emphasis inverted	R/W	0

©2014-2023 Lattice Semiconductor Corp. All Lattice trademarks, registered trademarks, patents, and disclaimers are as listed at www.latticesemi.com/legal.
All other brand or product names are trademarks or registered trademarks of their respective holders. The specifications and information herein are subject to change without notice.

SerDes Control Register 2 (CH_11)

Bit	Name	Description	R/W	Default
4:0	rterm_tx [4:0]	TX resistor termination select. Disabled when PCIe feature is enabled (Ω). 00000 – 5K 00001 – 80 00100 – 75 00110 – 70 01011 – 60 10011 – 50 11001 – 46 All other values are RESERVED.	R/W	4'b0000
6:5	tx_cm_sel[1:0]	Select TX output common mode voltage. 00 – Power down 01 – 0.6 V 10 – 0.55 V 11 – 0.5 V	R/W	2'b00
7	Internal use only	—	—	—

SerDes Control Register 3 (CH_12)

Bit	Name	Description	R/W	Default
1:0	tdrv_slice0_sel[1:0]	Tx drive slice enable for slice 0: 00 – Power Down 01 – Select Main Data 10 – Select Pre Data 11 – Select Post Data	R/W	2'b00
3:2	tdrv_slice1_sel[1:0]	Tx drive slice enable for slice 1: 00 – Power Down 01 – Select Main Data 10 – Select Pre Data 11 – Select Post Data	R/W	2'b00
5:4	tdrv_slice2_sel[1:0]	Tx drive slice enable for slice 2: 00 – Power Down 01 – Select Main Data 10 – Select Pre Data 11 – Select Post Data	R/W	2'b00
7:6	tdrv_slice3_sel[1:0]	Tx drive slice enable for slice 3: 00 – Power Down 01 – Select Main Data 10 – Select Pre Data 11 – Select Post Data	R/W	2'b00

©2014-2023 Lattice Semiconductor Corp. All Lattice trademarks, registered trademarks, patents, and disclaimers are as listed at www.latticesemi.com/legal.
All other brand or product names are trademarks or registered trademarks of their respective holders. The specifications and information herein are subject to change without notice.

SerDes Control Register 4 (CH_13)

Bit	Name	Description	R/W	Default
3:0	Internal use only	—	—	—
5:4	tdrv_slice3_cur[1:0]	Controls the output current for slice 3. Every 100 uA increases the output amplitude by 100 mV. 00 – 800 uA 01 – 1600 uA 10 – 2400 uA 11 – 3200 uA	R/W	2'b00
7:6	tdrv_slice4_cur[1:0]	Controls the output current for slice 4. Every 100 uA increases the output amplitude by 100 mV. 00 – 800 uA 01 – 1600 uA 10 – 2400 uA 11 – 3200 uA	R/W	0

SerDes Control Register 5 (CH_14)

Bit	Name	Description	R/W	Default
2:0	tdrv_slice0_cur[2:0]	Tx driver slice 0 current settings. Increases the output current of slice 0 by 100 uA which corresponds to a 100 mV differential increase in output amplitude. 000 – default swing amplitude (100 uA) 001 – 200 uA 010 – 300 uA 011 – 400 uA 100 – 500 uA 101 – 600 uA 110 – 700 uA 111 – 800 uA	R/W	2'b00
5:3	tdrv_slice1_cur[2:0]	Tx driver slice 1 current settings. Increases the output current of slice 1 by 100 uA which corresponds to a 100 mV differential increase in output amplitude. 000 – default swing amplitude (100 uA) 001 – 200 uA 010 – 300 uA 011 – 400 uA 100 – 500 uA 101 – 600 uA 110 – 700 uA 111 – 800 uA	R/W	2'b00
7:6	tdrv_slice2_cur[1:0]	Controls the output current for slice 2. Every 100 uA increases the output amplitude by 100 mV. 00 – 800 uA 01 – 1600 uA 10 – 2400 uA 11 – 3200 uA	R/W	2'b00

©2014-2023 Lattice Semiconductor Corp. All Lattice trademarks, registered trademarks, patents, and disclaimers are as listed at www.latticesemi.com/legal.
All other brand or product names are trademarks or registered trademarks of their respective holders. The specifications and information herein are subject to change without notice.

SerDes Control Register 6 (CH_15)

Bit	Name	Description	R/W	Default
3:0	lb_ctl[3:0]	Serial loopback control, only one bit should be selected: [3] – slb_r2t_dat_en serial RX to TX LB enable (CDR data) [2] – slb_r2t_ck_en serial RX to TX LB enable (CDR clock) [1] – slb_eq2t_en serial loopback from equalizer to driver enable [0] – slb_t2r_en serial TX to RX LB enable	R/W	4'b0000
5:4	tdrv_dat_sel [1:0]	Driver output select: 00 – Data from Serializer muxed to driver (normal operation) 01 – Data rate clock from Serializer muxed to driver 10 – Serial Rx to Tx LB (data) if slb_r2t_dat_en='1' 10 – Serial Rx to Tx LB (clock) if slb_r2t_ck_en='1' 11 – Serial LB from equalizer to driver if slb_eq2t_en='1'	R/W	2'b00
7:6	tdrv_slice5_cur[1:0]	Controls the output current for slice 5. Every 100 uA increases the output amplitude by 100 mV. 00 – 800 uA 01 – 1600 uA 10 – 2400 uA 11 – 3200 uA	R/W	2'b00

SerDes Control Register 7 (CH_16)

Bit	Name	Description	R/W	Default
0	rpwdnb	0 – Power down receiver channel 1 – Power up receiver channel	R/W	0
1	rate_mode_rx	0 – Full rate selection for receive 1 – Half rate selection for receive	R/W	0
2	rx_div11_sel	0 – Full rate selection for receive (high definition SMPTE) 1 – Divide by 11 selection for receive (standard definition SMPTE)	R/W	0
3	ldr_rx2core_sel	Enables boundary scan input path for routing the high speed Rx inputs to a lower speed SerDes in the FPGA (for out of band application)	R/W	0
4	rx_refck_sel	Rx CDR Reference Clock Select 0 – rx_refck_local 1 – ck_core_rx		
5	rcv_dcc_en	1 – Receiver DC coupling enable 0 – AC coupling	R/W	0
7:6	rxterm_cm[1:0]	Command mode voltage for Rx input termination: 00 – Rx Input Supply 01 – Floating (AC Ground) 10 – GND 11 – Rx Input Supply	R/W	0

©2014-2023 Lattice Semiconductor Corp. All Lattice trademarks, registered trademarks, patents, and disclaimers are as listed at www.latticesemi.com/legal.
All other brand or product names are trademarks or registered trademarks of their respective holders. The specifications and information herein are subject to change without notice.

SerDes Control Register 8 (CH_ 17)

Bit	Name	Description	R/W	Default
4:0	rterm_rx [4:0]	Rx input termination setting (Ω): 00000 – 5K 00001 – 80 00100 – 75 00110 – 70 01011 – 60 10011 – 50 11001 – 46 All other values are RESERVED	R/W	4'b0000
5	Reserved	—	—	—
7:6	rxin_cm[1:0]	Common mode voltage for equalizer input in AC-coupling: 00 – 0.7 V 01 – 0.65 V 10 – 0.75 V 11 – CMFB	R/W	2'b00

SerDes Control Register 9 (CH_18)

Bit	Name	Description	R/W	Default
3:0	Reserved	—	—	—
4	Reserved	—	R/W	0
5	Reserved	—	R/W	0
6	fc2dco_floop	1 – Force DCO lock to the frequency loop	R/W	0
7	fc2dco_dloop	1 – Force DCO lock to the data loop	R/W	0

©2014-2023 Lattice Semiconductor Corp. All Lattice trademarks, registered trademarks, patents, and disclaimers are as listed at www.latticesemi.com/legal.
All other brand or product names are trademarks or registered trademarks of their respective holders. The specifications and information herein are subject to change without notice.

SerDes Control Register 10 (CH_19)

Bit	Name	Description	R/W	Default
0	req_en	1 – Receiver equalization enable 0 – Receiver equalization disable	R/W	0
4:1	rx_rate_sel [3:0]	Equalizer pole position select	R/W	4'h0
6:5	req_lvl_set[1:0]	Level setting for equalization: 00 – 6 dB 01 – 9 dB 10 – 12 dB 11 – Not used	R/W	2'b00
7	Reserved	—	—	—

SerDes Control Register 11 (CH_1A)

Bit	Name	Description	R/W	Default
2:0	rx_dco_ck_div[2:0]	VCO output frequency select: 00x – Divided by 1 01x – Divided by 2 100 – Divided by 4 101 – Divided by 8 110 – Divided by 16 111 – Divided by 32	R/W	3'b000
3	pden_sel	This signal is used to disable the phase detector in the CDR during electrical idle. When set to 1, checks if los is set. If los is 0 then disables the phase detector (or data loop).	R/W	0
4	dco_facq_rst	Reset signal to trigger the DCO frequency acquisition process when it is necessary.	RW	0
5	dco_calib_rst	Reset signal to trigger the DCO calibration process when it is necessary.	RW	0
6	en_recalib	Enable recalibration: 0 – Disable 1 – Enable re-calibration	R/W	0
7	band_calib_mode	Calibration mode: 0 – Disable 1 – Enable	R/W	0

©2014-2023 Lattice Semiconductor Corp. All Lattice trademarks, registered trademarks, patents, and disclaimers are as listed at www.latticesemi.com/legal.
All other brand or product names are trademarks or registered trademarks of their respective holders. The specifications and information herein are subject to change without notice.

SerDes Control Register 12 (CH_1B)

Bit	Name	Description	R/W	Default
2:0	rx_los_lvl[2:0]	Sets differential p-p threshold voltage for loss of signal detection	R/W	3'b000
4:3	rx_los_ceq[1:0]	Sets the equalization value at input stage of LOS detector	R/W	2'b00
5	rx_los_hyst_en	Enables hysteresis in detection threshold level	R/W	0
6	rx_los_en	Enables loss of signal detector: 0 – Disabled 1 – Enabled	R/W	0
7	rlos_sel	Enables LOS detector output before enabling CDR phase detector after calibration: 0 – Disabled 1 – Enabled (If the channel is being used, this bit should be set to 1)	R/W	0

SerDes Interrupt Control Register 1 (CH_ 1E)

Bit	Name	Description	R/W	Default
0	~rlol_int_ctl	1– Enable interrupt when receiver is locked	R/W	0
1	rlol_int_ctl	1– Enable interrupt for receiver loss of lock	R/W	0
2	Reserved	—	—	—
3	Reserved	—	—	—
4	~rlos_int_ctl	1 – Enable interrupt for receiver Rx Loss of Signal when input level meets or is greater than programmed LOW threshold	R/W	0
5	rlos_int_ctl	1 – Enable interrupt for Rx Loss of Signal when input levels fall below the programmed LOW threshold (using rlos_set)	R/W	0
6	pcie_det_done_int_ctl	1 – Enable interrupt for detection of a far-end receiver for PCI Express	R/W	0
7	Reserved	—	—	—

©2014-2023 Lattice Semiconductor Corp. All Lattice trademarks, registered trademarks, patents, and disclaimers are as listed at www.latticesemi.com/legal.
All other brand or product names are trademarks or registered trademarks of their respective holders. The specifications and information herein are subject to change without notice.

Per Channel Reset and Clock Control Register Details

Reset and Clock Control Register 1 (CH_1F)

Bit	Name	Description	R/W	Default
0	sel_sd_rx_clk	1 – FPGA Bridge write clock and Elastic Buffer read clock driven by SerDes recovered clock 0 – FPGA Bridge write clock and Elastic Buffer read clock driven by ff_ebrd_clk	R/W	0
1	ff_rx_h_clk_en	1 – Enable ff_rx_h_clk	R/W	0
2	ff_rx_f_clk_dis	1 – Disable ff_rx_f_clk	R/W	0
3	ff_tx_h_clk_en	1 – Enable ff_tx_h_clk	R/W	0
4	ff_tx_f_clk_dis	1 – Disable ff_tx_f_clk	R/W	0
5	lane_tx_rst	1 – Assert reset signal to transmit logic	R/W	0
6	lane_rx_rst	1 – Assert reset signal to receive logic	R/W	0
7	Rrst	1 – Rx reset	RW	0

Per Channel PCS Status Register Details

PCS Status Register 1 (CH_30)

Bit	Name	Description	R/W	Int
0	fb_tx_fifo_error	1 – FPGA bridge (FB) TX FIFO overrun 0 – FB TX FIFO not overrun	RO	Y
1	fb_rx_fifo_error	1 – FPGA bridge (FB) RX FIFO overrun 0 – FB RX FIFO not overrun	RO	Y
2	cc_overrun	1 – CC FIFO overrun 0 – CC FIFO not overrun	RO	Y
3	cc_underrun	1 – CC FIFO underrun 0 – CC FIFO not underrun	RO	Y
4	pfifo_error	1 – Parallel FIFO error 0 – No Parallel FIFO error	RO	Y
7:5	Reserved	—	—	—

PCS Status Register 2 (CH_31)

Bit	Name	Description	R/W	Int
7:0	prbs_error_cnt[7:0]	Count of the number of PRBS errors. Clears to zero on read. Sticks at FF.	RO CR	N

PCS Status Register 3 (CH_32)

Bit	Name	Description	R/W	Int
3:0	wa_offset[3:0]	Word aligner offset	RO	N
7:4	Reserved	—	—	—

©2014-2023 Lattice Semiconductor Corp. All Lattice trademarks, registered trademarks, patents, and disclaimers are as listed at www.latticesemi.com/legal.
All other brand or product names are trademarks or registered trademarks of their respective holders. The specifications and information herein are subject to change without notice.

PCS General Interrupt Status Register 4 (CH _33)

Bit	Name	Description	R/W	Int
0	fb_tx_fifo_error_int	1 – Interrupt generated on fb_tx_fifo_error 0 – Interrupt not generated fb_tx_fifo_error	RO CR	Y
1	fb_rx_fifo_error_int	1 – Interrupt generated on fb_rx_fifo_error 0 – Interrupt not generated fb_rx_fifo_error	RO CR	Y
2	cc_overrun_int	1 – Interrupt generated on cc_overrun 0 – Interrupt not generated on cc_overrun	RO CR	Y
3	cc_underrun_int	1 – Interrupt generated on cc_underrun 0 – Interrupt not generated on cc_underrun	RO CR	Y
7:4	Reserved	—	—	—

PCS Status Register 5 (CH_34)

Bit	Name	Description	R/W	Int
0	cc_we_o	1 – Elastic FIFO write enable 0 – Elastic FIFO write disable	RO	N
1	cc_re_o	1 – Elastic FIFO read enable 0 – Elastic FIFO read disable	RO	N
3:2	Reserved	—	—	—
4	fb_txrst_o	1 – FPGA bridge Tx Normal Operation 0 – FPGA bridge Tx reset	RO	N
5	fb_rxrst_o	1 – FPGA bridge Rx Normal Operation 0 – FPGA bridge Rx reset	RO	N
6	ffs_ls_sync_status	1 – Sync in the link state machine 0 – Not sync in the LSM	RO	N
7	Reserved	—	—	—

PCS Status Register 6 (CH_35)

Bit	Name	Description	R/W	Default
7:0	Reserved	—	—	—

Per Channel SerDes Status Register Details

SerDes Status Register 1 (CH_36)

Bit	Name	Description	R/W	Int
0	~rlol	1 – Indicates that CDR has locked to data.	RO	Y
1	Roll	1 – Indicates CDR loss of lock to data. CDR is locked to reference clock.	RO	Y
3:2	Reserved	—	RO CR	Y
4	~rlos	1 – Indicates that the input signal detected by receiver is greater than or equal to the programmed LOW threshold.	RO CR	Y
5	Rlos	1 – Indicates that the input signal detected by receiver is below the programmed LOW threshold.	RO CR	Y
6	pci_det_done	1 – Receiver detection process completed by SerDes transmitter. 0 – Receiver detection process not completed by SerDes transmitter.	RO CR	Y
7	Reserved	—	—	—

©2014-2023 Lattice Semiconductor Corp. All Lattice trademarks, registered trademarks, patents, and disclaimers are as listed at www.latticesemi.com/legal.
All other brand or product names are trademarks or registered trademarks of their respective holders. The specifications and information herein are subject to change without notice.

SerDes Status Register 2 (CH_37)

Bit	Name	Description	R/W	Int
0	pci_connect	1 – Receiver detected by SerDes transmitter (at the transmitter device) 0 – Receiver not detected by SerDes transmitter (at the transmitter device)	RO	N
3:1	Reserved	—	—	—
4	DCO_FACQ_DONE	1 – indicates DCO frequency acquisition done	RO	N
5	DCO_FACQ_ERR	1 – indicates DCO frequency acquisition error (>300 ppm)	RO	N
6	DCO_CALIB_DONE	1 – indicates DCO calibration done	RO	N
7	DCO_CALIB_ERR	1 – indicates DCO calibration might be wrong (L/H boundary band selected)	RO	N

SerDes Interrupt Status Register 5 (CH _3A)

Bit	Name	Description	R/W	Int
0	~rlol_int	1 – Interrupt generated for ~rlol	CO CR	Y
1	rlol_int	1 – Interrupt generated for rlol	CO CR	Y
3:2	Reserved	—	—	—
4	~rlos_int	1 – Interrupt generated for ~rlos	CR RO	Y
5	rlos_int	1 – Interrupt generated for rlos	CR RO	Y
6	pci_det_done_int	1– Interrupt generated for pci_det_done	CR RO	Y
7	Reserved	—	—	—

©2014-2023 Lattice Semiconductor Corp. All Lattice trademarks, registered trademarks, patents, and disclaimers are as listed at www.latticesemi.com/legal.
All other brand or product names are trademarks or registered trademarks of their respective holders. The specifications and information herein are subject to change without notice.

Appendix B. Register Settings for Various Standards

Per Dual Register Settings for Different Standards

Register	1GbE	10GbE	RapidIO 1x	RapidIO 4x	PCI-Ex 1x	PCI-Ex 4x
comma_a_lo	hex 03	hex 03	hex 03	hex 03	hex 03	hex 03
comma_b_lo	hex fc	hex fc	hex fc	hex fc	hex fc	hex fc
comma_mask_lo	hex 7f	hex 7f	hex 7f	hex 7f	hex 7f	hex 7f

Per Channel Register Settings for Different Standards

Character	1GbE	10GbE	PCI-Ex	RapidIO
K23.7 (F7)	Carrier extend	—	PAD	—
K27.7 (FB)	SOP	ST	Start TLP	A (align)
K28.0 (1C)	—	SKIP R	SKIP	SC
K28.1 (3C)	—	—	FTS	—
K28.2 (5C)	—	SoS	Start DLLP	—
K28.3 (7C)	—	ALIGN A	IDLE	PD
K28.4 (9C)	—	SEQ	—	—
K28.5 (BC)	+ D5.6 or D16.2	—	—	—
= IDLE	SYNC K	COMMA	K	—
K28.6 (DC)	—	—	—	—
K28.7 (FC)	—	—	—	—
K29.7 (FD)	EOP	T	END	R (skip)
K30.7 (FE)	ERR	ERR	END BAD	—

©2014-2023 Lattice Semiconductor Corp. All Lattice trademarks, registered trademarks, patents, and disclaimers are as listed at www.latticesemi.com/legal.
All other brand or product names are trademarks or registered trademarks of their respective holders. The specifications and information herein are subject to change without notice.

References

- ECP5 and ECP5-5G page
- Boards, Demos, IP Cores and Reference Designs for ECP5 and ECP5-5G
- High-Speed PCB Design Considerations (FPGA-TN-02178)
- Electrical Recommendations for Lattice SerDes (FPGA-TN-02077)
- ECP5 and ECP5-5G Family Data Sheet (FPGA-DS-02012)
- LatticeECP3 Family Handbook (HB1009)
- LatticeECP3 Family Data Sheet (FPGA-DS-02074)
- LatticeECP3 SERDES/PCS Usage Guide (FPGA-TN-02190)
- Workaround for Lattice ECP5 (LFE5UM) Known Issue with SerDes Interface Connections Due to Unstable Reset Soft Logic (FPGA-PB-02001)
- Lattice Insight for Lattice Semiconductor Training Series and Learning Plans
- Clarity Designer Manual
- ECO Editor Manual

©2014-2023 Lattice Semiconductor Corp. All Lattice trademarks, registered trademarks, patents, and disclaimers are as listed at www.latticesemi.com/legal.
All other brand or product names are trademarks or registered trademarks of their respective holders. The specifications and information herein are subject to change without notice.

Technical Support Assistance

Submit a technical support case through www.latticesemi.com/techsupport.

For frequently asked questions, refer to the Lattice Answer Database at www.latticesemi.com/Support/AnswerDatabase.

©2014-2023 Lattice Semiconductor Corp. All Lattice trademarks, registered trademarks, patents, and disclaimers are as listed at www.latticesemi.com/legal.
All other brand or product names are trademarks or registered trademarks of their respective holders. The specifications and information herein are subject to change without notice.

Revision History

Revision 1.7, August 2023

Section	Change Summary
All	Changed the document title to *ECP5 and ECP5-5G SerDes/PCS User Guide* from ECP5 and ECP5-5G SerDes/PCS Usage Guide.
Standards Supported	In Table 6.1. Standards Supported by the SerDes/PCS: • changed the Data Rate (Mb/s) of JESD204A/B from *312.5*– to *312.5–3125/5000*; • changed the System Reference Clock (MHz) of JESD204A/B from *31.25*– to *31.25–156.25/250*; • changed the FPGA Clock (MHz) of JESD204A/B from *31.25*– to *31.25–156.25/250*.
References	Newly added the links to the following pages: ECP5 and ECP5-5G page, Boards, Demos, IP Cores and Reference Designs for ECP5 and ECP5-5G, and Lattice Insight for Lattice Semiconductor Training Series and Learning Plans.
Technical Support Assistance	Newly added the link to the Lattice Answer Database.

Revision 1.6, September 2022

Section	Change Summary
All	Corrected typo errors.
Introduction	Changed the text 'dual channel base' to 'dual channel blocks'.
New Features over LatticeECP3 SerDes/PCS	Changed the text 'channel base' to 'channel block'.
Standards Supported	Updated Table 6.1. Standards Supported by the SerDes/PCS for the PCS v8.2 update.

SerDes/PCS Functional Description	• Deleted the sentence 'The timing of absent signal determines meaning of handshaking between link endpoints' from the section 8.7. Loss of Signal.
	• Changed the following attributes:
	  • From 'CHx_RXWA' to 'CHx_WA_BYPASS'
	  • From 'CHx_ILSM' to 'CHx_LSM_DISABLE'
	  • From 'CHx_CTC' to 'CHx_CTC_BYPASS'
	  • From 'CC_MIN_IPG' to 'MIN_IPG_CNT'
	  • From 'CCHMARK' to 'HIGH_MARK'
	  • From 'CCLMARK.' to 'LOW_MARK'
	• The comma value changed from 'K28.1 (k=1, Data=0xFC)' to 'K28.7 (k=1, Data=0xFC)' in 8.21.1. Generic 8b10b Mode.

SerDes/PCS Reset	Deleted the 'Configuration' row from Table 15.1 since this is not described in this document.
SerDes/PCS Generation in Clarity Designer (System Builder/Planner)	Changed the following for the PCS v8.2 updates: • Updated Figure 17.2. Clarity Designer Catalog, Figure 17.4. Instance Setup Tab, and Figure 17.5. SerDes Setup Tab. • Updated Table 17.1. Instance Setup Tab Description, Table 17.2. SerDes Setup Tab Description, and Table 17.4. Control Setup Tab Description.

Revision 1.5, December 2021

Section	Change Summary
Using This Technical Note	Updated content to add reference to ECP5 SerDes workaround.
References	Added Workaround for Lattice ECP5 (LFE5UM) Known Issue with SerDes Interface Connections Due to Unstable Reset Soft Logic document reference.

Revision 1.4, September 2021

©2014-2023 Lattice Semiconductor Corp. All Lattice trademarks, registered trademarks, patents, and disclaimers are as listed at www.latticesemi.com/legal.
All other brand or product names are trademarks or registered trademarks of their respective holders. The specifications and information herein are subject to change without notice.

Section	Change Summary
Using This Technical Note	Added a paragraph to include references and links to the Electrical Recommendations for Lattice SerDes Technical Note (FPGA-TN-02077)
Clarity Designer (System Builder/Planner) Overview	Added a link to FPGA-TN-02077 in the EXTREF sub-section.

Revision 1.3, July 2021

Section	Change Summary
Appendix A	• Updated the rx_rate_sel [3:0] descriptions in the table SerDes Control Register 10 by removing TBD values • Updated the rx_los_lvl[2:0] and rx_los_ceq[1:0] descriptions in the table SerDes Control Register 12 by removing TBD values

Revision 1.2, May 2021

Section	Change Summary
All	• Changed document number from TN1261 to FPGA-TN-02206. • Updated document template. • Changed all SERDES instances to *SerDes* across the document. • Changed Quad instances to *DCU*.
Acronyms in This Document	Updated this section.
Disclaimers	Added this section.
Architecture Overview	Updated Figure 7.5, Table 7.3, and Table 7.5.
SerDes/PCS Functional Description	• Changed PCS Quad to *PCS Dual* in Word Alignment (Byte Boundary Detect) and External Link State Machine Option. • Changed Valid (odd) comma boundary to *Invalid (odd) comma boundary* in Generic 8b10b Mode. • Updated bullet item in Receive Path to change one PCS quad to *one or two DCU*. • Updated Figure 8.14.
SerDes Client Interface	• Removed SCI address map table. • Updated Figure 12.2 and Figure 12.3.
Other Design Considerations	Updated information in Unused Dual/Channel and Power Supply section.
SerDes/PCS Generation in Clarity Designer (System Builder/Planner)	Added note in Table 17.2.

Revision 1.1, November 2015

Section	Change Summary
All	• Added support for ECP5-5G. • Changed document title to ECP5 and ECP5-5G SERDES/PCS Usage Guide.
Acronyms in This Document	Updated Acronyms in This Document
Features	Updated Features section. Revised details of Up to Four Channels of High-Speed SERDES with Increased Granularity feature.
New Features over LatticeECP3 SerDes/PCS	Updated New Features over LatticeECP3 SerDes/PCS section. Added Transmit/Receive SERDES to eDP SERDES interface support.
Difference between ECP5 and ECP5-5G SerDes/PCS	Added Difference between ECP5 and ECP5-5G SerDes/PCS section.
Standards Supported	Updated Standards Supported section. Revised Table 6.1. Standards Supported by the SerDes/PCS. • Added PCI Express 2.0 standard. • Added E.48.LV under CPRI-E.6.LV • Changed SD-SDI (259M, 344M) and JESD204A/B values.

©2014-2023 Lattice Semiconductor Corp. All Lattice trademarks, registered trademarks, patents, and disclaimers are as listed at www.latticesemi.com/legal.
All other brand or product names are trademarks or registered trademarks of their respective holders. The specifications and information herein are subject to change without notice.

Section	Change Summary
	• Added eDP-RBR and HBR. • Removed Serial RapidIO (SR/LR) standard. • Added footnote.
Multi-Protocol Design Consideration	Updated Multi-Protocol Design Consideration section. Revised Table 7.2. LFE5UM/LFE5UM5G Mixed Protocol Pair. • Changed SRIO to SGMII. • Removed SRIO 1.25G/2.5G. • Added protocols.
Receive Data Bus	Updated Receive Data Bus section. Revised Table 7.3. Data Bus Usage by Mode. Removed SRIO column.
Tx Differential Output Driver	Updated Tx Differential Output Driver section. Removed 1.2 V indicated as VCCHTX.
Generic 8b10b Mode	Updated Generic 8b10b Mode section. Revised Generic 8b10b applications supported by LFE5UM SERDES/PCS block.
SerDes/PCS Functional Description	• Updated section heading to PCI Express Revision 1.1 and 2.0 • Updated PCI Express Termination section. • Revised information on differential signaling pairs. • Revised information on PCI Express L2 State. • Updated Figure 8.10. PCI Express Interface Diagram • Updated Common Public Radio Interface (CPRI) section. • Revised four-line bit rate options allowed by CPRI. Added descriptive contents. • Revised information on link layer requirements. Removed OBSAI specifications. • Updated SDI (SMPTE) Mode section. Revised HD-SDI (SMPTE292M) and 3G-SDI (SMPTE424M) information. Added descriptive contents. • Added Embedded Display Port (eDP) section.
Serial RapidIO (SRIO) Mode	Removed Serial RapidIO (SRIO) Mode section.
FPGA Interface Clocks	Updated 2:1 Gearing section. Revised Table 10.2. Decision Matrix for Six Interface Cases. • Changed SERDES Line Rate to Above 2.5 Gb/s. • Added table note 7.
SerDes/PCS Reset	Updated Reset Sequence section. Added information on Reset Sequence Logic (RSL).
Clarity Designer (System Builder/Planner) Overview	• Updated Clarity Designer (System Builder/Planner) Overview section. Modified Differential Amplitude value in Table 17.2. SERDES Setup Tab Description. • Updated SERDES/PCS Generation in Clarity Designer (System Builder/Planner) section. • Removed SRIO and added eDP in the list of protocols you selected. • Updated Table 17.1. Instance Setup Tab Description. Updated values for TX Max Data Rate, PLL Multiplier, Tx Line Rate, Receive Max Data • Rate (CDR), Rx Line Rate. Added footnote. • Updated Table 17.2. SERDES Setup Tab Description. Updated default value for Differential Amplitude.
Technical Support Assistance	Updated Technical Support Assistance section.

Revision 1.0, March 2014

Section	Change Summary
All	Initial release.

©2014-2023 Lattice Semiconductor Corp. All Lattice trademarks, registered trademarks, patents, and disclaimers are as listed at www.latticesemi.com/legal.
All other brand or product names are trademarks or registered trademarks of their respective holders. The specifications and information herein are subject to change without notice.

www.latticesemi.com